Chapter 3

Magnets, Toroids, and Beam Pipes

3.1 Overview

Three large extended mechanical assemblies dominate the layout of the BTeV spectrometer: the Vertex Magnet (dipole), the muon toroids, and the Tevatron beampipe. Their location in the C0 Collision Hall and their relation to the other detector components is shown in Figs. 3.1 and 3.2. The active detector elements of the spectrometer must be designed to fit within the constraints presented by these three components.

The Vertex Magnet in the BTeV spectrometer provides the magnetic field around the Tevatron collision point that enables the silicon pixel detector to determine both the direction and momentum of particles produced in the proton-antiproton collisions. This is essential for the proposed displaced vertex trigger to work. The forward tracker uses the full field volume from the particle interaction to the end of the magnet, including the field beyond the pixel detector, to produce an even better measurement of the momentum than is possible with just the pixel detector alone.

The Vertex Magnet is based on the existing SM3 magnet (currently part of the decommissioned Fermilab MEast Spectrometer). The magnet operated in MEast from 1982 until 1997, at a central field of about 0.8 Tesla, serving experiments E605, E772, E789, and E866. This magnet is shown in its current form in Fig. 3.3.

The SM3 magnet was assembled by welding together, in place, various blocks of iron recovered from the Nevis Cyclotron. It has a total weight of 500 metric tons. After disassembly and transport to C0, the magnet, modified by the addition of pole-piece shims, will be reassembled in the C0 Assembly Hall and rolled into the C0 Collision Hall.

Studies with magnetostatic modeling programs have led to a design for new pole-piece inserts for SM3. These pole-pieces yield a central field of 1.6 Tesla, and an integrated dipole field of 5.2 T-m. The magnet will be oriented so that charged particles are deflected in the vertical plane. The vertical deflection of the Tevatron beam by the Vertex Magnet is compensated by two conventional dipoles at each end of the Collision Hall.

The two muon toroids at the north end of the Collision Hall provide the bend field that enables the muon chambers to detect and determine the momentum of energetic muons from

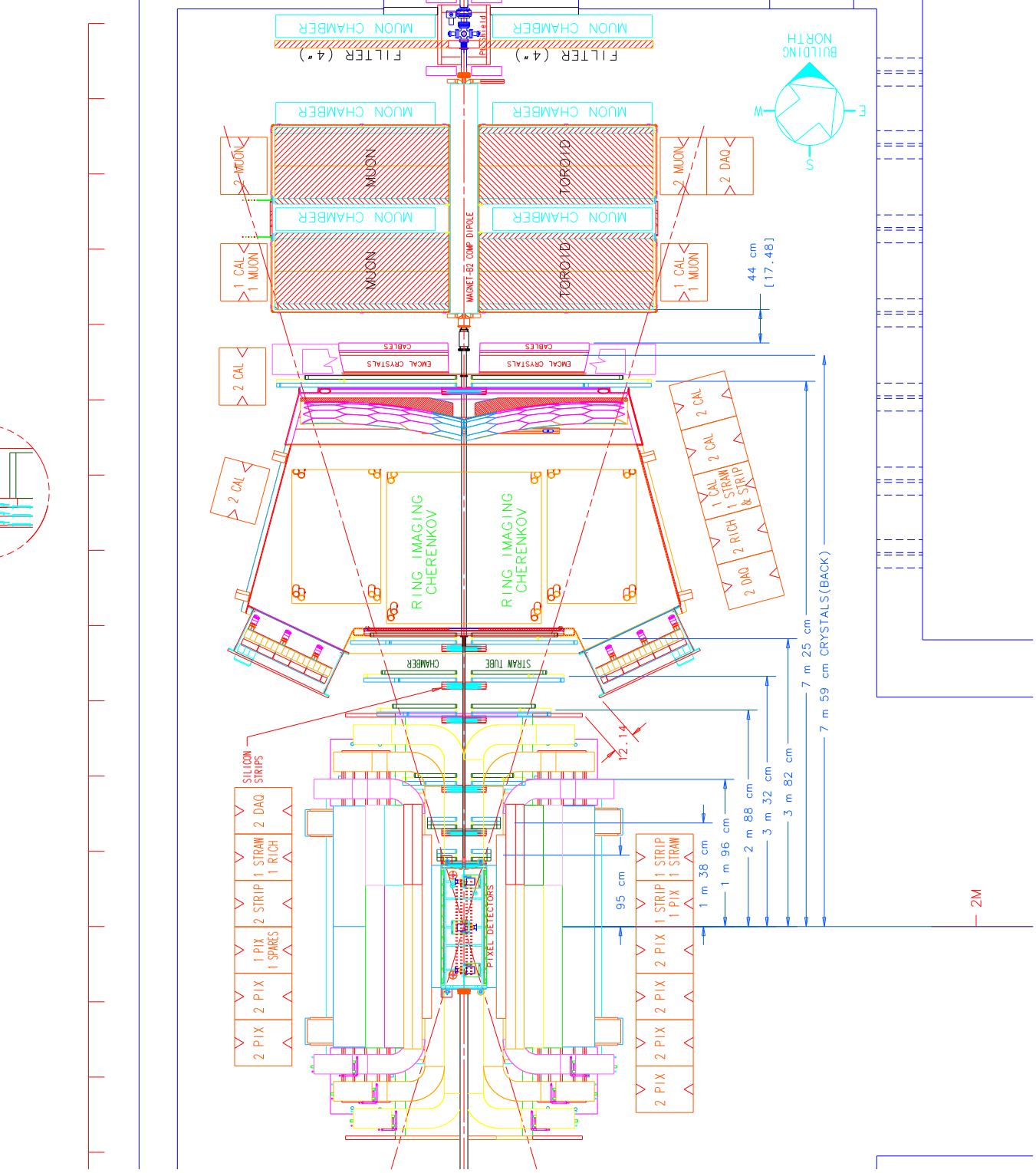

Figure 3.1: Plan view of BTeV Detector showing mechanical details that emphasize the relation of the Vertex Magnet, Beam Pipes and Toroids to the other detector components

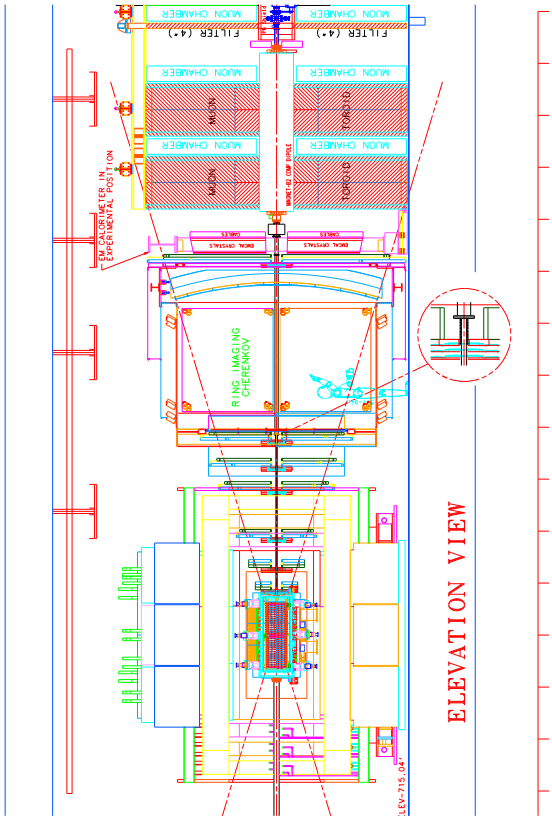

Figure 3.2: Elevation view of BTeV Detector showing mechanical details that emphasize the relation of the Vertex Magnet, Beam Pipes and Toroids to the other detector components

the collision point. The toroids at both the north and south end of the Collision Hall provide support for the compensating dipoles. Both the north and south pair of toroids also provide the absorber material that prevents hadrons, electrons and photons from penetrating and registering in the muon detectors. To provide both a large integrated magnetic field and enough absorption of hadrons, each toroid is constructed of a meter thick soft iron core energized by a pair of coils that span both toroids in the pair. The iron slabs that form the toroids will be recovered from the existing SM12 magnet in the MEast Spectrometer.

The beampipe provides the vacuum for, and encloses, the circulating Tevatron proton and antiproton beams. It must be able to conduct the wall current associated with the circulating beams. It must also be as thin as possible in order to minimize the reinteraction

Figure 3.3: Photograph of the SM3 dipole as it currently exists in the Meson Area at Fermilab

of particles emanating from the collision point. The plan is to construct the beampipe in sections. The 1" diameter beampipe in the region of the forward tracking chambers will be made by modifying the existing CDF RunIIb beryllium beam pipe. The 2" diameter beampipe inside the RICH detector will be made by modifying the existing CDF Run I beryllium beampipe.

Since the Vertex Magnet and muon toroids are very large assemblies, they will be assembled in the C0 assembly building and rolled into the C0 Collision Hall.

3.2 Requirements

This section describes the high level requirements for the BTeV Vertex Magnet (VM), Toroid Magnets (TM) and Beampipes (BP). The purpose of the VM is to provide a strong uniform magnetic field in the region of the silicon pixel detector in order to allow the momentum of high-energy particles to be determined at the trigger level and to provide a large integrated magnetic field to provide excellent mass resolution for multibody decays of B hadrons when the pixel detector and forward tracker are used together to determine track momentum. The purpose of the TM is to provide a magnetized iron absorber that will absorb all hadrons emitted from the interaction region and hence will identify muons (since a muon is the only charged particle that can penetrate 2 meters of iron) and, by deflecting the muons magnetically, help confirm their momentum for purposes of triggering the data acquisition system. The purpose of the BP is to provide the high vacuum containment for the accelerator beams through the BTeV apparatus.

The current design of the BTeV detector has one spectrometer arm on the anti-proton side of a large vertex dipole magnet at the interaction point in C0. The Vertex Magnet provides a region of strong uniform magnetic field to house the silicon pixel vertex detector. The last detector station in the spectrometer is a muon detection station that includes large magnetized iron toroids. The Tevatron proton and antiproton beams are transported through the detector in a small diameter beampipe that must be kept as thin and lightweight as possible to minimize reinteraction of the secondary particles from the initial proton-antiproton collision.

3.2.1 Requirements on the Vertex Magnet

The silicon pixel vertex detector has a length of 1.23 m and extends to $\pm$ 5 cm transversely. A magnetic field of at least 15 kilogauss insures that the strength of the field does not dominate the fractional error in the determination of the momentum by the pixel detector. The silicon pixel detector is capable of making approximately a 2% measurement of particle momenta. Integrated field strength, along the z-axis, of at least 1.5 GeV/c is needed to achieve the planned momentum resolution, and hence mass resolution, of the BTeV spectrometer. An important constraint on the allowable field variation derives from the need to align the silicon pixels for each separate experimental run while the field is excited to full strength.

Magnetic field strength: The VM must develop a magnetic field of at least 15 kilogauss at the center and integrated field strength 5 T-m along the z-axis corresponding to a P_t kick of 1.5 GeV/c.

Magnetic field uniformity: The VM must produce a magnetic field that varies by less than 1% over the full extent of the silicon pixel detector in order to facilitate the determination of the pixel alignment constants. Provision must be made to measure the spatial variation of the VM magnetic field over the aperture of the spectrometer, before installation, to 0.2% accuracy relative to the maximum field value.

Field non-linearities: These must conform to Fermilab Tevatron standards [1].

Lifetime: The VM must be designed to operate (consistent with its design goals, and the need to ramp the magnet from low to full excitation for every collider store) over the expected lifetime of the experiment.

3.2.2 Requirements on the Toroid

Many physics studies in BTeV depend on accurate identification of muons by their ability to penetrate 2 meters of iron. There is also a requirement to implement a stand-alone muon trigger at Level 1, which requires the measurement of muon momenta, independent of the silicon pixels and forward tracking system.

Magnetic field strength: The TM must develop a magnetic field of at least 1.4 Tesla at all radii.

Toroid size: The TM must cover the full transverse size of the muon chambers.

Toroid thickness: The system of two toroids and one absorber in the muon detector must be a total of at least 12 hadronic interaction lengths thick (2.0 meters for iron).

Field non-linearities: These must conform to Fermilab Tevatron standards [1].

Lifetime: The TM must be designed to operate (consistent with its design goals) over the expected lifetime of the experiment.

3.2.3 Beampipe Requirements

The BTeV beampipe includes the large torispherical windows at the ends of the silicon pixel detector vacuum box. The instantaneous luminosity that the BTeV detector can handle will be limited by the background of tertiary particles arising from the reinteraction of secondary particles in the beampipe walls; thus they must be kept as thin as possible. In order to achieve maximum acceptance for B-hadron decay products, the beampipe should allow detectors to be placed at angles as small as 10 milliradians with respect to the collision point. The successful storage of protons and antiprotons in the accelerator, and the minimization of background interactions with residual gas, requires a very high vacuum in the beampipe.

Beampipe wall thickness: The BP walls must be thinner than 0.5 mm of Aluminum equivalent in both radiation and interaction length and have a straightness of better than 1 mm per meter. The BP torispherical window must be thinner than 1 mm of Aluminum equivalent.

Beampipe vacuum: The BP must reach a vacuum of less than 10^{-8} torr when installed in the Tevatron.

Beampipe radius: The BP must have an ID of at least 24 mm and an OD of less than 27 mm for all longitudinal positions within 4 m of the interaction point. For the region between 4 m and the entrance to the compensating dipole at about z = 8 m the ID must be at least 35 mm and the OD less than 55 mm. The flanges connecting the sections of the BP at z = 4m and at z= 7m must be as light and as thin as possible in order to minimize both the number of radiation lengths and interaction lengths seen by secondary particles.

Robustness: Since the BP will be exposed in some sections during normal usage, it should be protected from impacts by small or light objects that could result in its collapse.

3.2.4 Fault Tolerance

The VM, TM, and BP are the largest elements in the BTeV spectrometer and are the core and backbone of the BTeV spectrometer. Repairs to any one of them in the event of failure will be extremely disruptive, requiring the disassembly of many detector elements to facilitate repairs. Engineering and initial testing of these systems must address the need for these elements to function reliably throughout the entire BTeV program, which could be as long as ten years of operation.

VM testing: The VM coils must be renovated and tested to a power level 110% of normal excitation for a period of at least 24 hours.

TM testing: The TM system must be run at a power level 110% of normal excitation for a period of at least 24 hours.

BP testing: The failure of the BP would be particularly disruptive to both the BTeV detector and the Tevatron accelerator complex. The beampipe design must have a mechanical safety factor of 3. The BP must reach vacuum levels of less than 10^{-8} torr in bench tests.

3.2.5 Installation and Surveying

The VM and TM will be the first elements of the BTeV detector installed in the C0 Collision Hall. Their large weight will cause a general depression of the C0 Collision Hall with respect to the Tevatron accelerator. Since most of the BTeV detector systems will be mounted either directly on, or at least with reference to the VM, TM or BP, provision must be made for regular survey of the VM, TM and BP with respect to the Tevatron accelerator coordinates.

Internal Survey: A coordinate reference system for the BTeV detectors needs to exist, and be maintainable over the life of the experiment. This coordinate system should be anchored on the walls of the C0 Collision Hall but include the VM as a fundamental element in the primary coordinate system and survey. Provision must be made for easy accessibility to its primary survey reference fiducials throughout the course of the experiment.

Installation of VM and TM: It is anticipated that the VM and TM will be transported to the Collision Hall by sharing a common set of Hilman rollers. Thus provision must be made for subsequent small adjustments of their positions after initial installation.

BP Survey: The transverse position of the BP with respect to the Tevatron beam must be controlled and understood precisely. Provision must be made to locate and secure the BP position transversely to within 1 mm at all points between the Pixel detector and the RICH detector entrance and to 2 mm beyond this region.

3.2.6 Control and Monitoring

The electrical excitation levels of the VM and the TM, as well as the high vacuum status of the BP are of such critical importance to the operation of the Tevatron accelerator that the primary control and monitoring of these components will be under the control of the Fermilab Accelerator Division Main Control Room through the ACNET control system. Nevertheless, BTeV will also want to have an independent measure of these parameters available through the experiment monitoring and control system.

VM, TM and BP Monitoring: The excitation and status of the VM, TM, and BP will be controlled and monitored by the ACNET control system using standard Tevatron control systems and protocols. The BTeV experiment will indirectly monitor these systems through an interface to the ACNET control system.

Alarms: The BTeV detector control and monitoring system will include alarms and limits on the excitation and status of the VM, TM, and BP systems via the interface to the ACNET control system. It must also include Hall probe field measurements with 0.2% absolute accuracy and vacuum measurements with an accuracy of 10^{-9} torr local to the BTeV experiment.

3.2.7 Electrical Requirements

Standard Accelerator Division high current power supplies will power the VM and TM. These supplies will be installed by, and maintained by, the Accelerator Division Power Supply Group following the electrical standards adopted by the Accelerator Division. Members of the BTeV group will not be allowed to service or modify these devices in any way. The power supply must excite the Vertex Magnet to 4200 Amps with a stability of 0.1% per hour.

Compliance with Accelerator Division Electronics Standards: The electrical excitation of the VM and TM will comply with the Accelerator Division Electrical Standards.

Vacuum pumps for the BP will be provided by the Accelerator Division and will be under the sole control of Accelerator Division personnel. Note that the vacuum inside the Pixel detector vacuum tank is provided by the BTeV group and is addressed in the Pixel section of the TDR.

BP vacuum pump standards: The BP vacuum pumps will be installed by Accelerator Division personnel according to Accelerator Division Electrical Standards.

3.2.8 ES&H Requirements

The VM, TM and BP will have stored energy (electrical, magnetic and vacuum) that could constitute safety hazards.

Electrical safety: All electrical aspects of the VM, TM and BP will conform to the Fermilab ESH manual on electrical safety.

Vacuum Safety: All aspects of the BP system will conform to the Fermilab ESH manual on Vacuum Systems.

3.2.9 Dependencies with Respect to Other Detectors

The designs of the VM and TM have been developed based on reusing existing components from the E866 experiment at Fermilab. The renovation, modification and testing of these components may uncover some restrictions on the design and operation of the VM and TM.

Existing Components: The performance envelope of the VM and TM will be sensitive to any problems that may be uncovered in the status of existing components from Fermilab experiment E866 that are to be reused. In particular, the fringe magnetic fields of the VM and TM may be large enough to effect the operation of some of the spectrometer elements thus necessitating the addition of soft iron shield plates to the TM and VM designs.

The BTeV collaboration has obtained possession of the 2" CDF Run I beryllium beam pipe and the 1" CDF Run IIb beryllium beam pipe. We will modify these beam pipes for use in the BTeV spectrometer.

3.2.9.1 Design Implications for other BTeV components

The VM and the TM determine the gross mechanical layout of the BTeV spectrometer and hence directly affect the design of all the detectors. The beam pipe and the Pixel vacuum tank are directly connected and hence the vacuum acheived in either is affected by both.

Beryllium beampipes: No spectrometer component can be designed to mount directly on the beampipe since the beryllium beam pipes are very thin and fragile.

Vertex Magnet fringe field: All spectrometer components must be designed to withstand the magnetic forces that occur on magnetic materials in the extensive fringe field region of the VM. In addition, all spectrometer components must be able to withstand the transient induced eddy current forces that occur on any electrically conducting material in the VM fringe field region when the VM is ramped to maximum current, or, more importantly, when it trips off.

3.3 Technical Description and Design of the Magnets, Toroids, and Beampipes

3.3.1 Vertex Magnet

A schematic of the BTeV Vertex Magnet is shown in Fig. 3.4. The magnet is modified from the SM3 magnet by the addition of new pole-piece inserts. The reason for this is to get higher field in the region of the silicon pixel vertex detector. This improves the resolution of the pixel detector's stand-alone momentum measurement. It also increases the integrated field, which improves the combined momentum measurement of the pixel system and the forward tracker.

With the pole-piece modifications shown, finite element analysis calculations predict a central field of 1.6 Tesla, and an integrated dipole field of 5.2 T-m. The magnet will be oriented so that charged particles are deflected in the vertical plane. The vertical deflection of the Tevatron beam by the Vertex Magnet is compensated by two conventional dipoles at each end of the spectrometer. This orientation is necessary to fit the BTeV spectrometer into the C0 Collision Hall while achieving the design acceptance. The basic physical characteristics of the Vertex Magnet are given in Table 3.1.

Table 3.1: BTeV/C0 Vertex Magnet Properties

Property	Value	Comment
$\int B \times dl$	5.2 T-m	2.6 T-m on each side of center of IR
Central Field	1.6 Tesla	
Steel Length	3.2 m	
Overall length	5.3 m	
Magnet Vert. aperture	± 0.3 rad	
Magnet Horz. aperture	± 0.3 rad	

The magnet is centered on the interaction region thus creating the potential for two forward spectrometers but only one spectrometer is proposed at this time.

The steps required to turn SM3 into the BTeV Vertex Magnet and install it into the C0 Collision Hall are the following:

1. disassemble the existing SM3 magnet in the Meson Area Detector Building and transport the pieces to the C0 Assembly Hall;

2. procure the pole-piece shims and additional fixturing;

3. reassemble, with the new pole piece shims, the SM3 magnet using the C0 Assembly Hall crane;

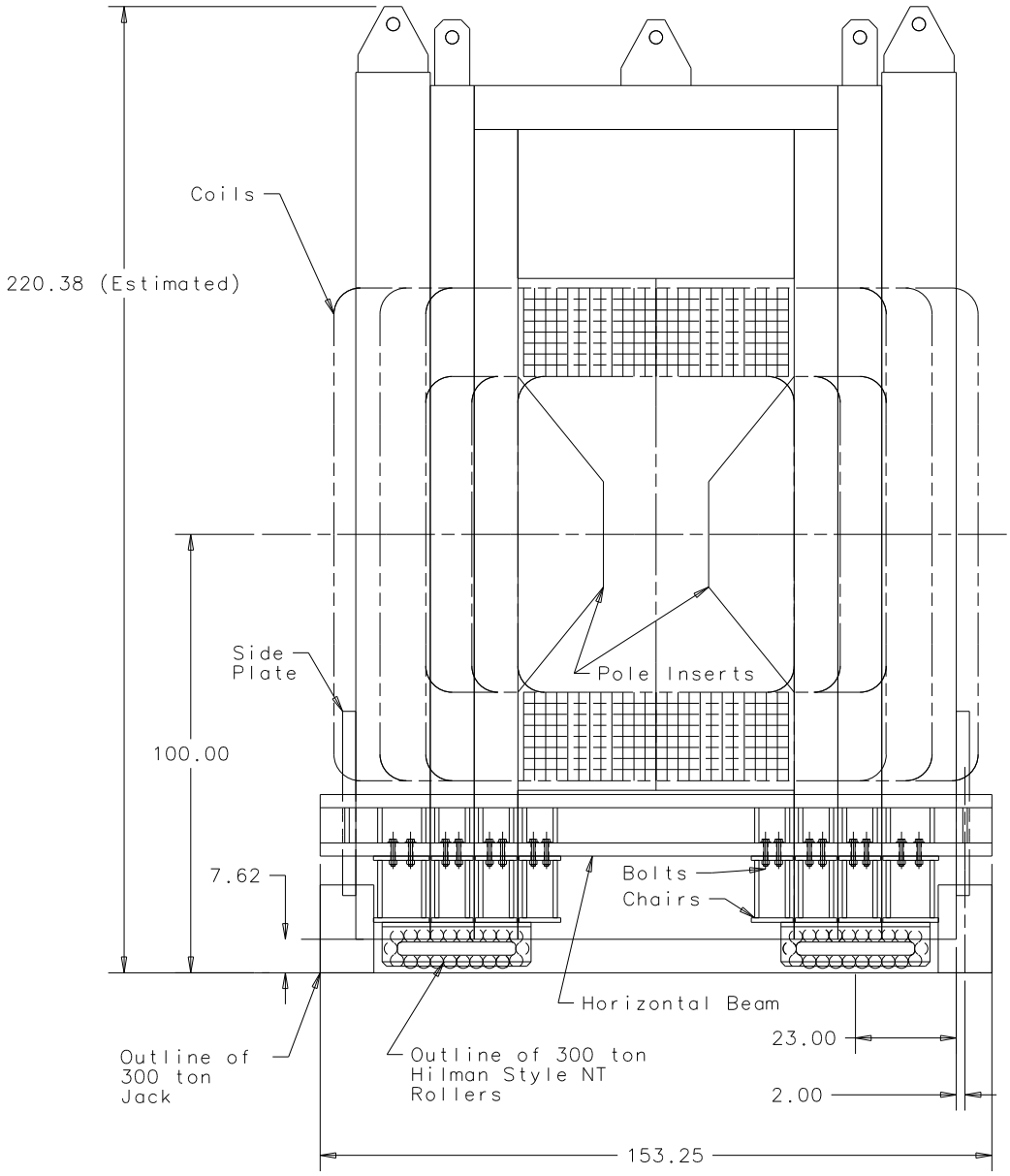

Figure 3.4: Cross section of the BTeV Vertex Magnet (modified SM3 dipole) with rollers and pole piece inserts. All dimensions are in inches.

4. hook the magnet to temporary utilities and protection systems and map its field; and
5. move the magnet into the Collision Hall and hook up its utilities and protection systems.

In the following, we describe each step of this process.

3.3.1.1 SM3 Disassembly sequence and Transportation to C0 Assembly Hall

In this section, the SM3 disassembly sequence is summarized. The steps are shown schematically in figures 3.5, through 3.12. An associated plan shows how each piece of SM3 will be stored in the C0 Assembly Hall to facilitate reassembly with the 30 ton crane. The step by step disassembly and storage plan is available elsewhere.

1. Disconnect water and power
2. Dismount the flux return plates, Fig. 3.5(left)
3. Remove spacer Posts, Fig. 3.5(right).
4. Install Coil Support Brackets, Fig. 3.6(left).

   The weight of the coils and support plate are:

Item	Approximate Weight	Number
Inner Coil	5.5 tons	2
Middle Coil	6.0 tons	2
Outer Coil	6.5 tons	2
ASP	2.6 tons	
Total Coils and ASP	38.6 tons	

5. Remove first East yoke block, Fig. 3.6(left).
6. Remove second East yoke block, Fig. 3.6(right).
7. Remove East 10” thick pieces (2 pcs), Fig 3.7(left).
8. Remove upper Yoke blocks (3 pcs), Fig 3.7(right).
9. Remove shims between the Coils and iron blocks.
10. Remove East Inner 10” thick blocks.
11. Remove 85” wide block, Fig. 3.8(left).
12. Remove 42” wide Slab, Fig. 3.8(right).

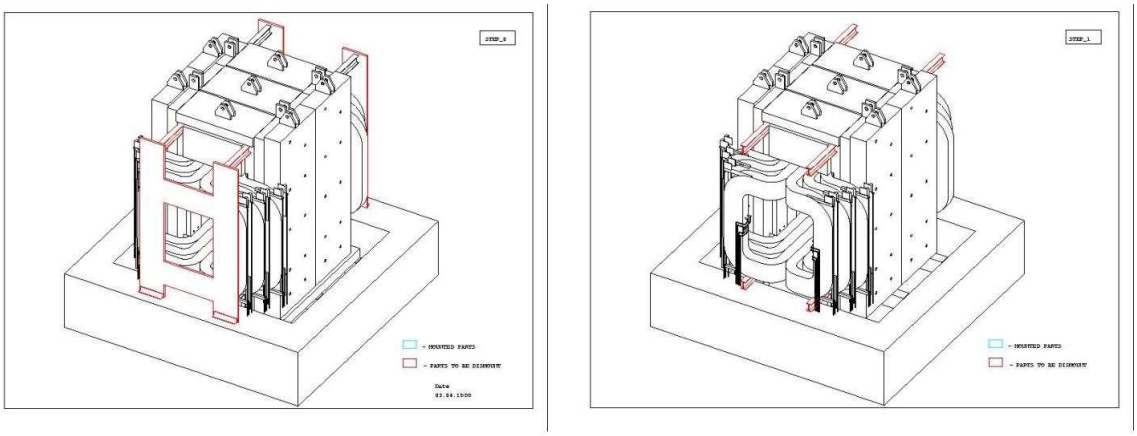

Figure 3.5: SM3 Analysis Magnet disassembly steps 1 (left) and 2 (right)

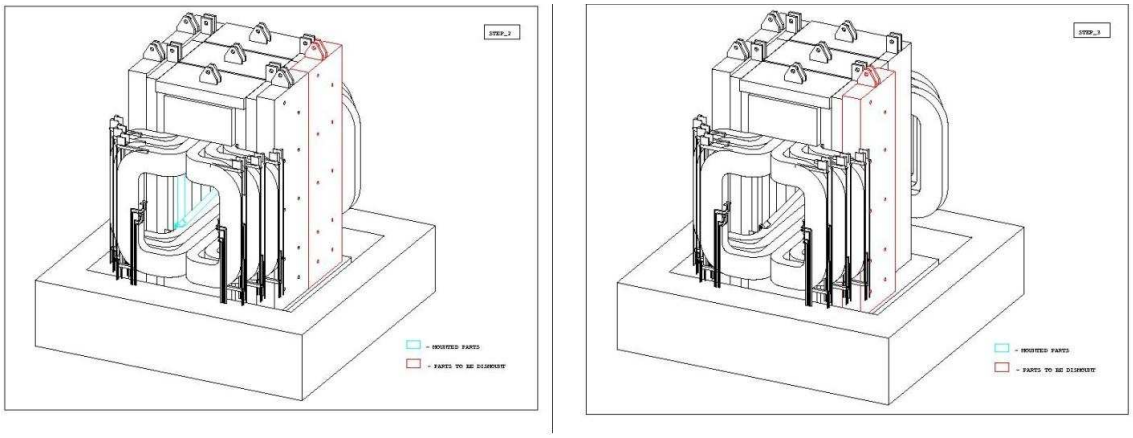

Figure 3.6: SM3 Analysis Magnet disassembly steps 3 (left) and 4 (right)

13. Remove 6 Coils, Figs. 3.9(left) and 3.9(right). The Coils will be stored in Meson Detector Building until needed at C0.

14. Remove Aluminum support plate, Fig. 3.10(left).

15. Dismount remaining West iron blocks and bottom iron blocks in order, see figures Fig. 3.10(left) to Fig. 3.12(left).

The final view of the dismounted magnet is shown in Fig. 3.12(right). The disassembled pieces of the Vertex Magnet will be stored in the Meson Detector Building or on a hardstand (under a tarpaulin) at C0 so they will be ready for reassembly in the C0 Assembly Hall as soon as needed.

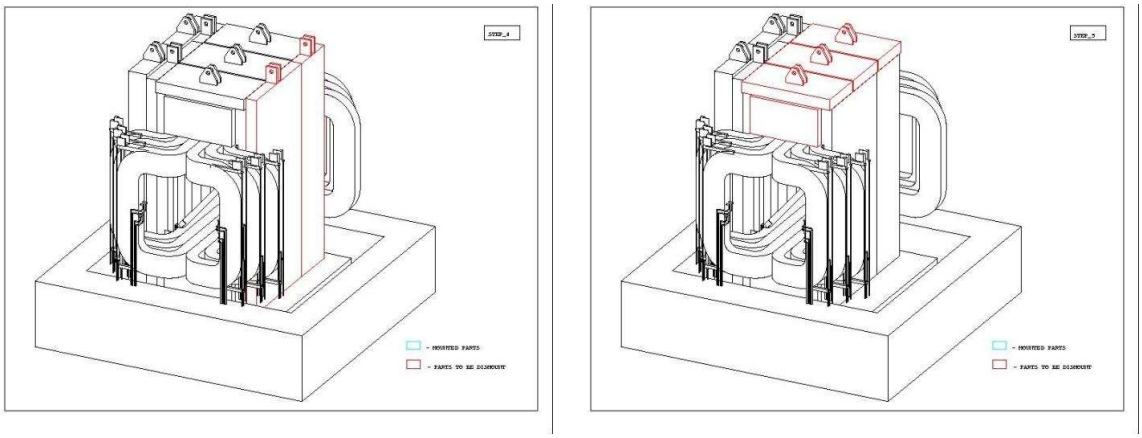

Figure 3.7: SM3 Analysis Magnet disassembly steps 5 (left) and 6 (right)

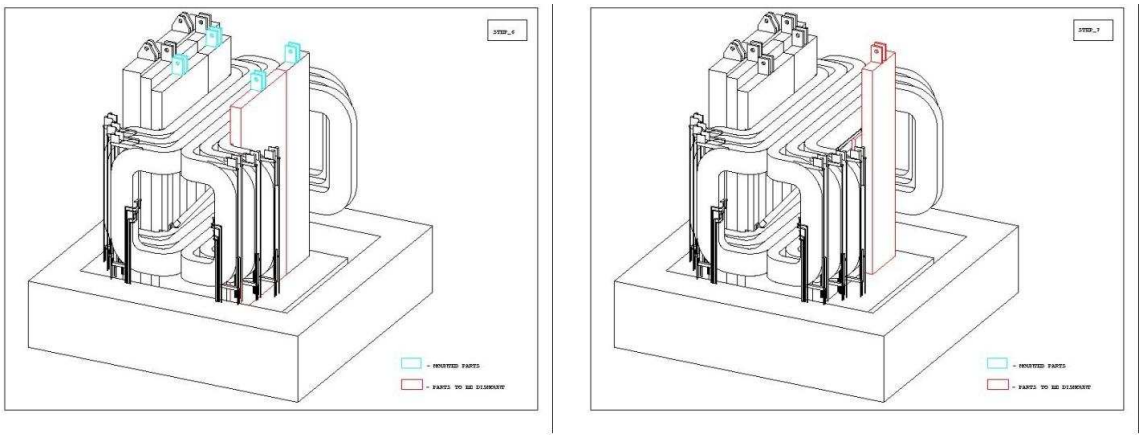

Figure 3.8: SM3 Analysis Magnet disassembly steps 7 (left) and 8 (right)

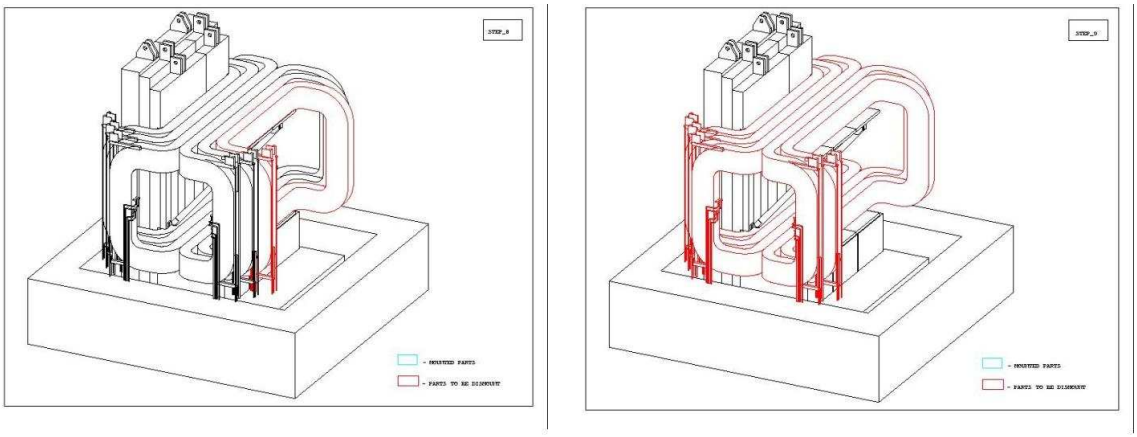

Figure 3.9: SM3 Analysis Magnet disassembly steps 9 (left) and 10 (right)

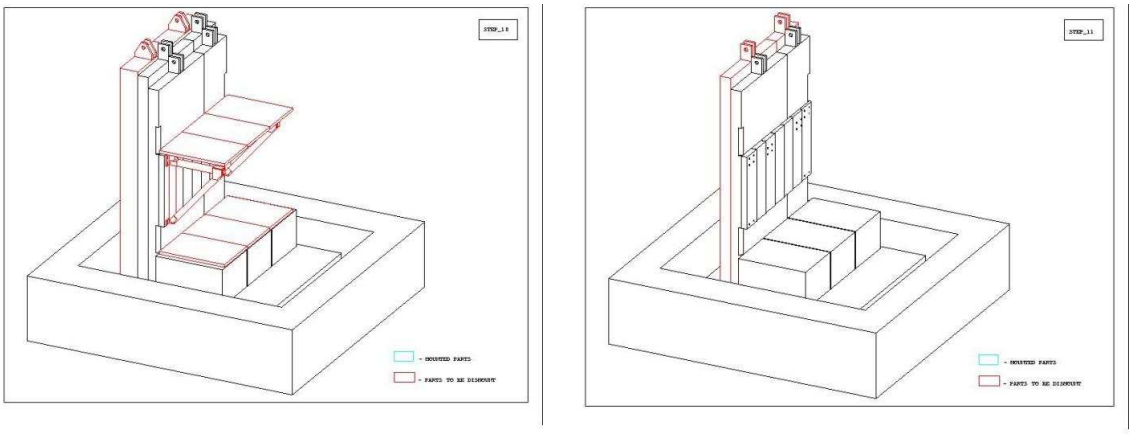

Figure 3.10: SM3 Analysis Magnet disassembly steps 11 (left) and 12 (right)

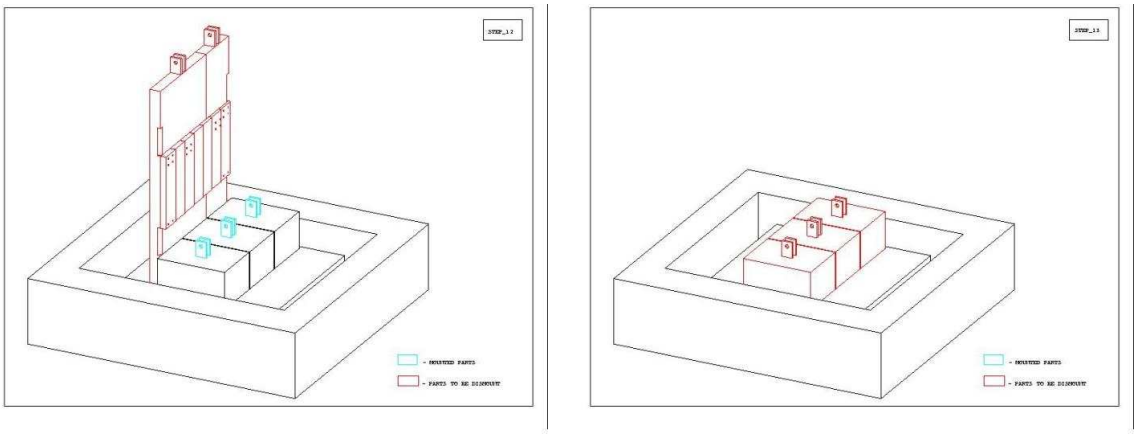

Figure 3.11: SM3 Analysis Magnet disassembly steps 13 (left) and 14 (right)

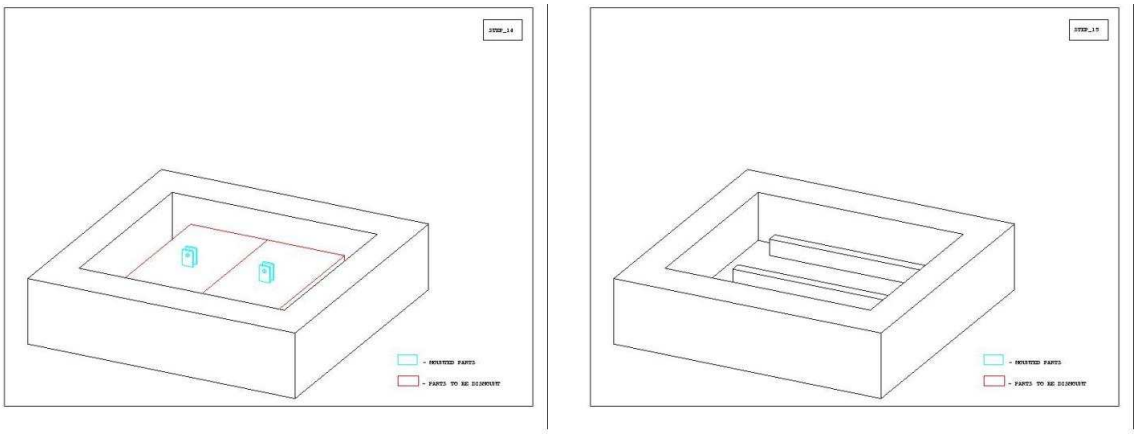

Figure 3.12: SM3 Analysis Magnet disassembly steps 15 (left) and 16 (right)

3.3.1.2 Design and Procurement of Shims and Additional Fixturing

The prints for the fixtures fabricated to assemble the SM3 magnet in 1982 have been recovered. New fixtures needed to disassemble SM3 and reassemble it in the C0 Assembly Hall are being designed based on the original fixture design. The shims were designed using the magnetostatic computer code OPERA. They will be fabricated from high quality soft iron.

3.3.1.3 Reassembly of Magnet, with the new pole piece shims, using the C0 Assembly Hall Crane

The magnet will be reassembled at C0 under the C0 Assembly Hall 30 ton crane using a procedure that is almost exactly the reverse of the disassembly procedure given in detail above. The only major difference is that during steps 7, 8 and 13 of the procedure shown above, the new pole-piece shims will be substituted for the existing SM3 pole-piece shims. This also requires a modification of the aluminum support plate brackets used in step 11.

3.3.1.4 Connection of the magnet to temporary utilities and protection systems and mapping of its field

The magnetic field will be mapped while the Vertex Magnet is in the Assembly Hall. To do this, a short temporary connection from the power supplies in the C0 Assembly Hall to the assembled magnet will be constructed from water-cooled bus. The magnet LCW water will be connected to the LCW header in the Assembly Hall that also supplies LCW to the power supplies. The power supplies and controls will be connected and tested under the control of the Accelerator Division ACNET control system.

The Ziptrack magnet measuring system will be renovated, modified, installed, and used to measure the magnetic field of the assembled magnet over an extensive x,y,z grid of points including the extensive fringe field region of the magnet. The data from the Ziptrack measurements will then be transferred to BTeV permanent data storage. The Ziptrack has been used recently by E907 at Fermilab [2] but will need some modification to measure the tapered pole insert regions of the Vertex Magnet gap.

3.3.1.5 Movement of the magnet into the Collision Hall and hookup to its utilities and protection systems

The Hilman rollers from the C0 shielding door will be mounted on the magnet support structure and the magnet will be pulled into the C0 Collision Hall, using the existing C0 hydraulic cylinder pulling system, during a long Tevatron maintenance shutdown. The permanent water-cooled bus, LCW water connections, and control and safety systems will then be reconnected. After allowing two weeks for settling, the magnet will be shimmed into its final location on the C0 interaction point.

3.3.1.6 Power, Cooling, Control, Monitoring, and Utility Systems

The magnet will be connected to a pair of standard Accelerator Division PEI power supplies operated in series. The magnet will operate at 4200 Amps at 125 Volts. One supply will be operated in current mode and the other in voltage mode. The magnet and power supply cooling will be provided from the existing Tevatron tunnel LCW water system. This does not add significantly to the complexity of the existing system since there currently exist at C0 conventional magnets in the Tevatron lattice that will be removed for the BTeV installation. The existing ACNET control system can handle all the control and monitoring functions necessary to run the BTeV magnets without the need for system expansion. The C0 Collision Hall HVAC system has been sized appropriately to remove the heat radiated from the coils of the magnets during full excitation.

3.3.1.7 Magnetostatic Analysis of BTeV Dipole Magnet

The ANSYS finite element program was used to calculate the field in the BTeV dipole magnet. The finite element model consists of 590,000 elements and 605,000 nodes, with an element size in the region of the magnet center of 2.5 cm. The iron and coils are shown in Fig. 3.13. The air and iron are modeled with the ANSYS SOLID96 element, using the generalized scalar potential option. Coils are modeled with SOURCE36 current source elements.

The BH curve is shown in Fig. 3.14. The data are available elsewhere. This curve was measured for iron used in the MINOS detector, and its shape very closely matches that of the BTeV iron (which was originally recovered from the Nevis cyclotron) when the BTeV iron curve is corrected for hysteresis. The pole piece iron will be specified to have magnetic properties at least as good as the MS10360 curve. Thus the MS10360 curve is assumed for simulating the pole piece and the recovered SM3 iron for this analysis.

Results show that, with an operating current of 4200 amps, the magnet central field is 1.59 T, and $\int B \times dl$, integrated along the axis, is 5.24 T-m.

The B-field magnitude in the center of the magnet (in the plane Z = 0) is shown in Fig. 3.15. The maximum field occurs at the edge of the pole piece nearest the center, and is 3.23 T.

The variation of field along the magnet axis is shown in Fig. 3.16. The calculated central field (X=0, Y=0, Z=0) is 1.59 T.

The value of $\int B \times dl$ along the magnet axis (X=0, Y=0) is 5.24 T-m. The variation of this integral along parallel paths about the magnet center is shown in Figs. 3.17 and 3.18.

3.3.2 Muon Toroids

A muon toroid assembly provides the bend field that enables the muon chambers to determine the momentum of energetic muons from the vicinity of the collision point, without any use of the measurements from the pixel detector or forward tracker. This capability is exploited to form a "stand-alone" muon trigger to complement, cross check, and calibrate

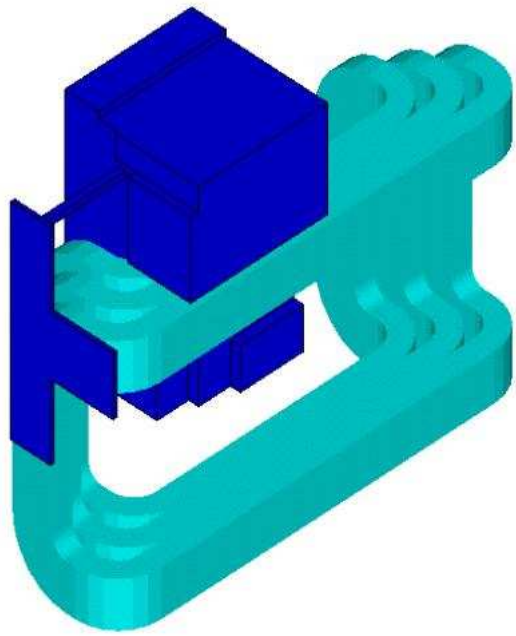

Figure 3.13: Finite Element Analysis Model of BTeV Dipole (air elements and half of coils removed for clarity)

the BTeV Detached Vertex Trigger[3]. The toroid assembly also provides the absorber material that prevents hadrons, electrons, and photons from penetrating and registering in the muon detectors. To provide both a large integrated magnetic field and enough absorption of hadrons, each toroid is constructed of a meter thick soft iron energized by a pair of coils. The toroid assembly also supports the 10' B2 dipole, the "Compensating Dipole" (see below). Finally, the toroid structure is used to support a cantilevered plate, the Muon Filter, which shields the final stations of the muon detector from the spray of particles hitting near apertures of the Compensating Dipole or the beampipe.

Note that a second toroid assembly will be built and located symmetrically at the south end of the Collision Hall. This is needed to support the south compensating dipole and to shield the BTeV spectrometer from radiation emanating from the south Tevatron tunnel.

It is planned to obtain the iron slabs that form the toroids from the existing SM12 magnet in the MEast Spectrometer. The SM12 magnet has 36 30-ton iron yoke blocks that can be recovered without fully disassembling the SM12 magnet. 24 of these pieces will be recovered, modified and transported to the C0 Assembly Hall. They will then be combined with other soft iron pieces to form 4 octagonal-toroid magnets. The final assembly will also include mounting points for the muon detectors on the north pair of toroids, extra absorber around the beampipe, and inserted compensation dipoles that are needed to return the

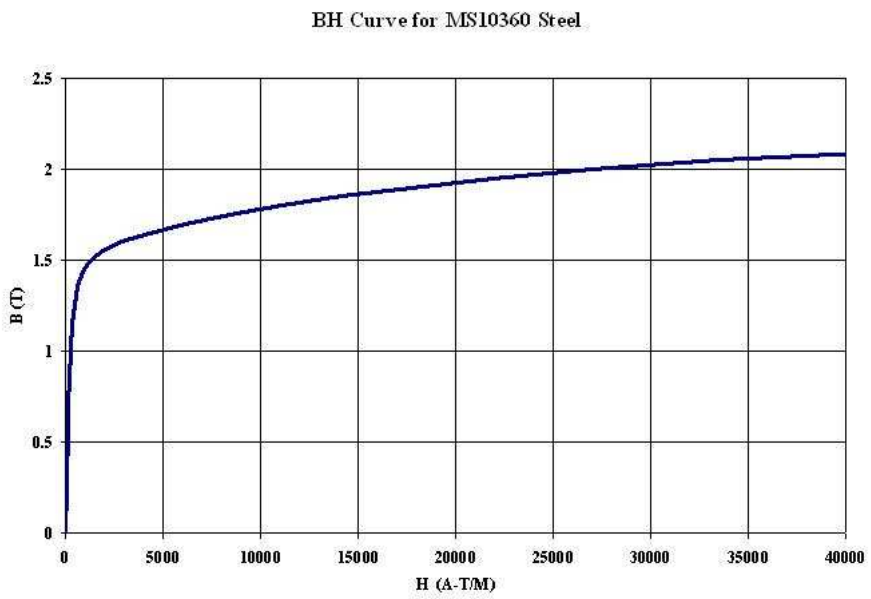

Figure 3.14: BH Curve for MS10360 Steel

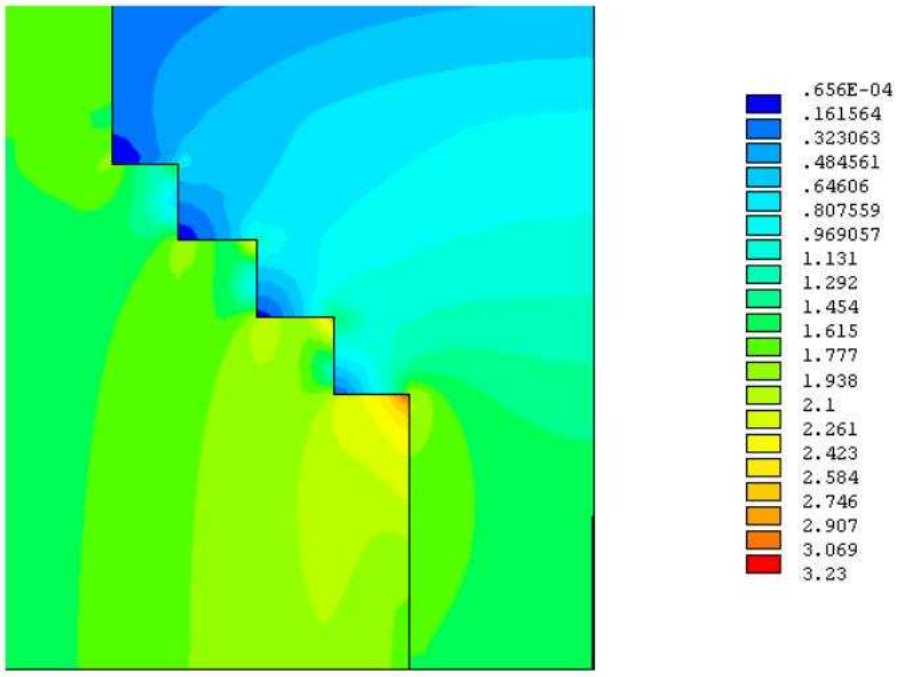

Figure 3.15: B-field at the Center (Z=0) of the BTeV Vertex Magnet

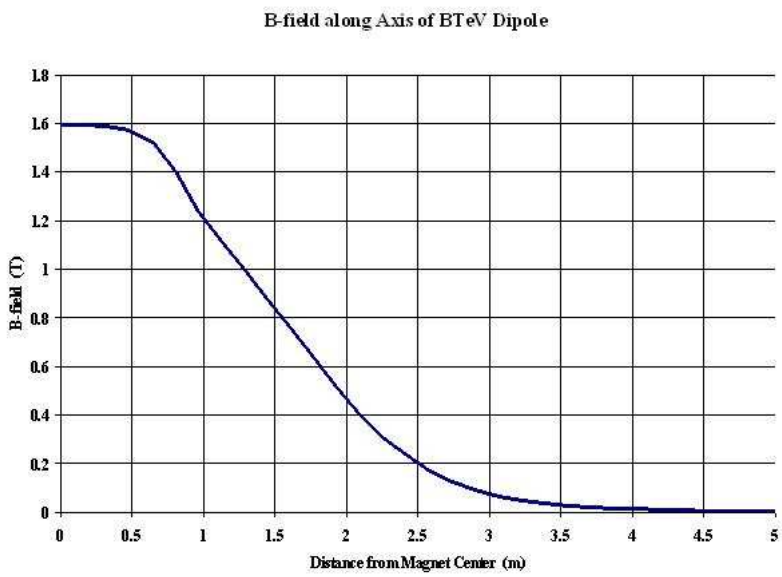

Figure 3.16: B Along the Z Axis (X=0, Y=0) of the BTeV Vertex Magnet

Tevatron circulating beams to their original trajectories. The components' weights are given in Table 3.2.

Table 3.2: The Mass and Weight of the Toroid Magnet

Item	Weight
Toroid Iron	365 tons
Muon Filter	19.5 tons
Coils	0.6 tons
Support Accessories	5.4 tons
B2 Magnet	6.2 tons
Assembled Pair of Toroids	397 tons
Assembled Toroid Pair with Moving Equipment	405 tons

The steps required to construct the Muon Toroids are the following:

1. Remove 24 iron slabs from the existing SM12 magnet in the Meson Area Detector Building and transport them to the C0 Assembly Hall;

2. Procure the remaining parts, including coils, additional steel slabs and other fixturing;

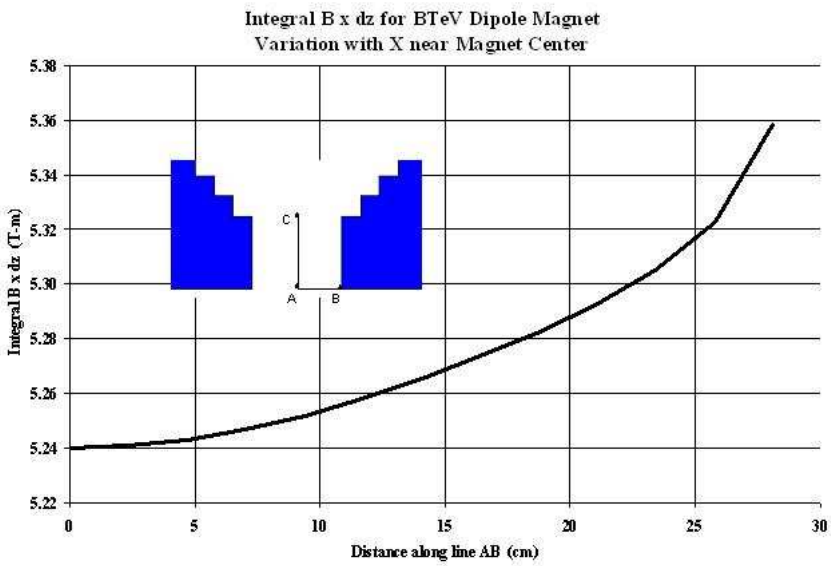

Figure 3.17: Variation with X of $\int B \times dz$ for BTeV Vertex Magnet near the magnet center (Y=0)

3. Construct the toroids using the C0 Assembly Hall crane;

4. Roll the toroids into the Collision Hall and hook up their utilities and protection systems.

3.3.2.1 Recovery of Iron Slabs from the Existing SM12 Magnet and Transportation to the C0 Assembly Hall

The Toroid Magnet (TM) parts includes: Four 198" x 198" x 40" octagonal shaped magnets, coils, a muon filter, a pair of B2 compensation dipole magnets, and some supporting structural devices needed for muon filter and muon chamber installation on the north toroid assembly only. Also, there are accessory structures for moving the two toroid-pair assemblies from the C0 Assembly Hall to the C0 Collision Hall.

The two octagonal shaped toroid assemblies in each toroid pair weigh a combined 365 tons. About 85% of the soft iron will come from salvaging iron from the existing SM12 magnet used by Experiment E866 in the Meson Lab. It will take 24 pieces of the 36 existing soft iron rectangular blocks, each with dimension 198" x 63" x 17".

The SM12 magnet is constructed identically to the SM3 magnet and hence the procedure for removing the 24 iron return yoke pieces from this magnet is also identical to step 5 in the SM3 disassembly procedure outlined in detail above. They will be stored in the Meson

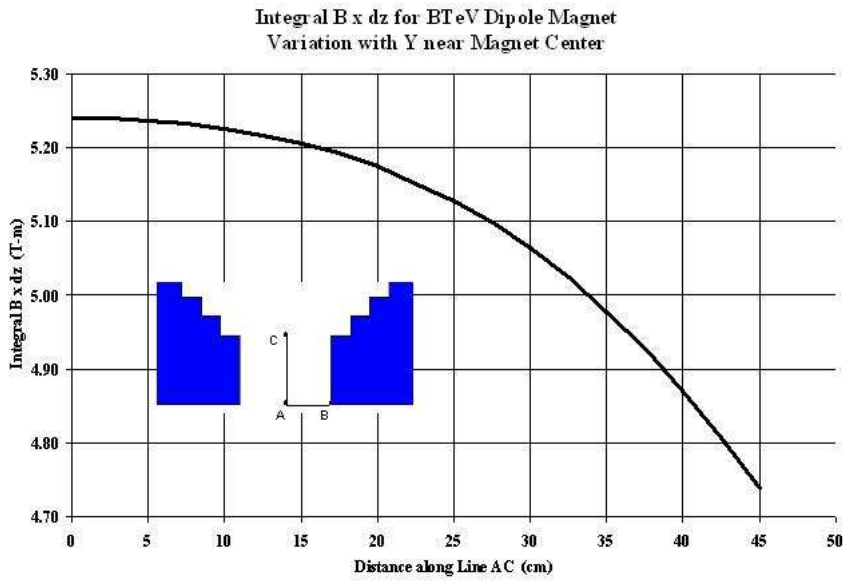

Figure 3.18: Variation with Y of $\int B \times dz$ for the BTeV Vertex Magnet near the magnet center (X=0)

Detector Building and then transported to the C0 Collision Hall when needed for the toroid assembly.

3.3.2.2 Procurement of Coils, Additional Steel Slabs and Other Fixturing

The toroid coils have sections that can be removed to provide access for installing Muon chambers located between the two toroids in a toroid pair. The 4 coils will have 10 turns each and will be made from existing 0.57" x 1.00" copper bus which includes a 1/4" hole for water-cooling. A new fixture will be required to form the coil segments. Each of the coil segments will have lugs welded to each end and stainless water tubes brazed at each end. The coils will be wrapped with multiple layers of kapton for insulation. The coils are spaced and mounted to the Toroid iron with G-10 brackets. A special crate that can hold 10 coil segments will be used for handling, assembly, and shipping. Since these coils will be readily accessible and easy to repair, no spare coil turns will be produced.

The toroid coils will be fabricated by the Technical Division using existing copper conductor. The coil winding, insulating and curing procedure will be identical to a procedure previously used to produce coils with this conductor. There will be 40 single turn coils produced using an existing coil winding machine at the Fermilab magnet facility.

The remaining 15% of the soft iron will be purchased. The purchased iron will be used for

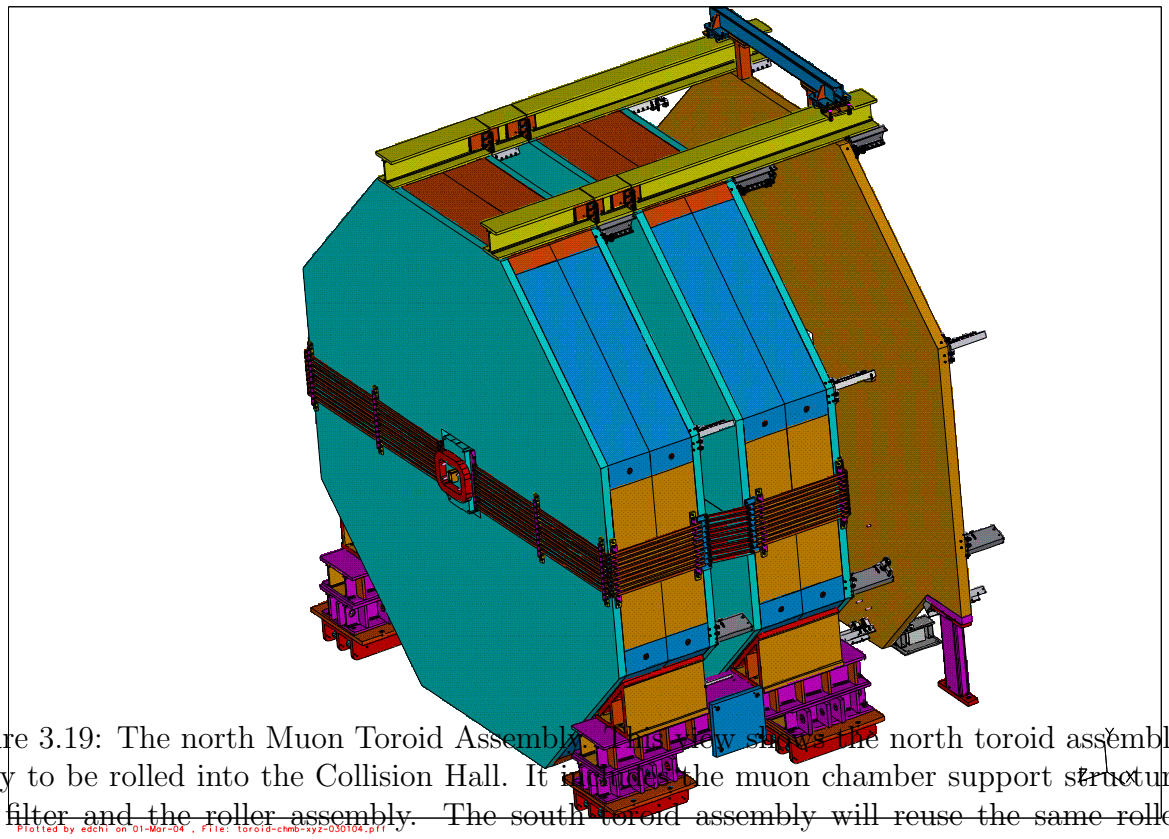

Figure 3.19: The north Muon Toroid Assembly. This view shows the north toroid assembly ready to be rolled into the Collision Hall. It includes the muon chamber support structure and filter and the roller assembly. The south toroid assembly will reuse the same roller assembly and will not have the muon chamber superstructure.

the 4 soft iron plates with dimensions of 198" X 99" x 2". All these parts will be appropriately fabricated into the 5 different iron sizes needed to build the two octagonal toroids.

3.3.2.3 Toroid Magnet Parts Description

The Toroid construction involves a number of additional slabs of iron and some fixturing. Purchased soft iron pieces of dimension 198" x 99" x 2" complete the body of the two Toroids. These purchased pieces along with the return yoke slabs from SM12 will be flame cut and assembled as detailed below into the two pairs of large octagonal Toroids.

The 4 inch thick Muon Filter, located downstream of the Toroids, will be fabricated from 2 pieces of 198" x 99" x 2" steel plate. These plates are supported from the toroid. Two I-beams are mounted to the top of the Toroids. They have the following functions:

1. to provide lateral structural support and increase structural stability;

2. to create a mechanical work bench for the installation or removal of the Muon Chambers at the Collision Hall; and

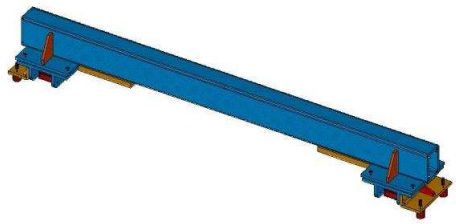

Figure 3.20: Trolley used to provide Z motion for the Muon Filter

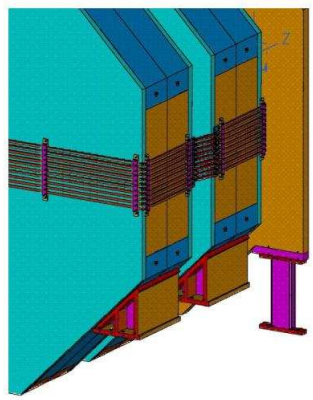

Figure 3.21: Vertical Leg used to provide support for the Muon Filter

3. to enable the Muon Filter to move along the beam direction (z dir.) to create extra access space for the Muon Chamber installation and other service activities.

On the north pair of toroids only, a Muon Filter will hang from a trolley (Fig. 3.20) that can run along the top of the I-beams mounted to the tops of the Toroids. It is composed of a rectangular steel tube, two 15 ton Hilman rollers, and 4 cam rollers to guide the direction. The device supplies the support for the filter in the vertical (Y) and longitudinal (Z) directions and enables the filter to move in the beam direction (Z) for access to the Muon chambers located on the backside of the Filter. When in the final position the weight of the Filter will be transferred to two legs that connect at the outer edges. The vertical supporting leg is shown in Fig. 3.21. The top of the Filter will remain connected to the trolley, which will be locked in position to provide longitudinal stability.

The same four 500 ton Hilman rollers, Fig. 3.22, that are used for moving the Collision Hall shield door will be used for moving the Toroid magnets into the Collision Hall. The

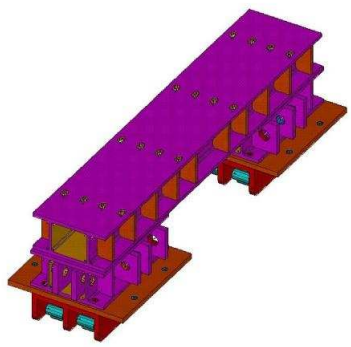

Figure 3.22: Hilman Roller assembly used to roll both of the BTeV Toroid pair assemblies and also the Vertex Magnet from the C0 Assembly Area to the C0 Assembly Hall

Hilman rollers will mount under two bridge beams that connect the two Toroid magnets at the bottom. The bridge beams have locations for hydraulic cylinders for lifting the Toroid magnet pair for installation and removal of the Hilman rollers. The same hydraulic cylinders used for raising and lowering the shield door will also be used for the Toroid magnets.

3.3.2.4 BTeV Toroid Assembly Sequence

The steps required to assemble the Muon Toroids are summarized below and in Figs. 3.23 through 3.27. A detailed description is available elsewhere.

Step 1: Weld two bottom slabs (4.5" thick-Slab5) together.
Step 2: Add four trapezoidal shape slabs.
Step 3: Add four support brackets by crane.
Step 4: Add four middle central slabs.
Step 5: Add eight rectangular side slabs.
Step 6: Add four 3" thick lower part plate slabs.
Step 7: Mount the coils.
Step 8: Insert the B2 Compensation Dipole Magnet.
Step 9: Add four large blocks to the top.
Step 10: Add top side .
Step11: Add 3"-thick top pieces.
Step 12: Add I-beams on the top.
Step 13: Add pre-assembled muon chamber rails.
Step 14: Add muon filter.

After testing, the assembled 405 ton Toroid Magnet pair is then ready for moving to the C0 Collision Hall for Installation.

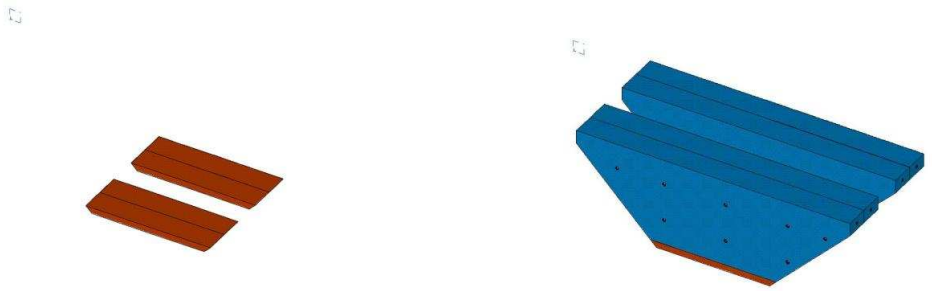

Figure 3.23: Toroid Assembly Steps 1 and 2

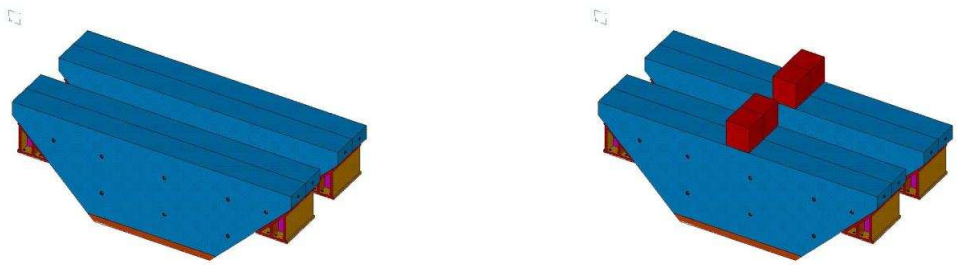

Figure 3.24: Toroid Assembly Steps 3 and 4

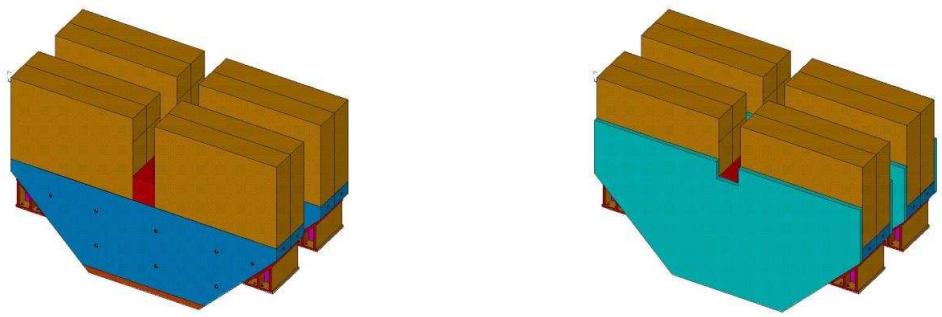

Figure 3.25: Toroid Assembly Steps 5 and 6

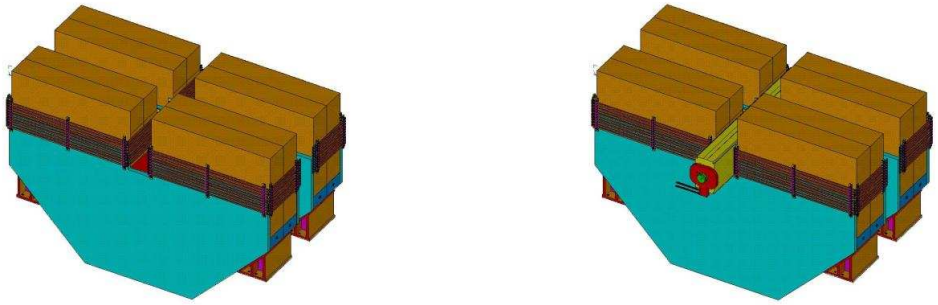

Figure 3.26: Toroid Assembly Steps 7 and 8

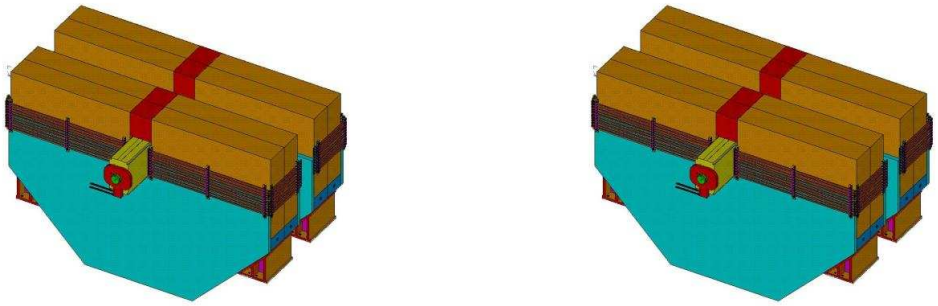

Figure 3.27: Toroid Assembly Steps 9 and 10

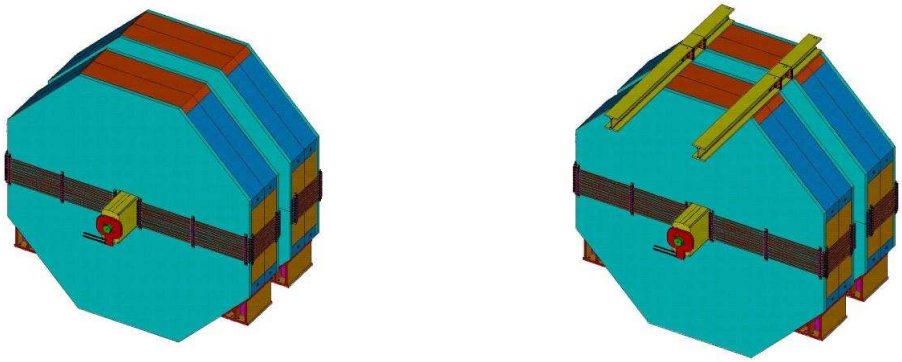

Figure 3.28: Toroid Assembly Steps 11 and 12

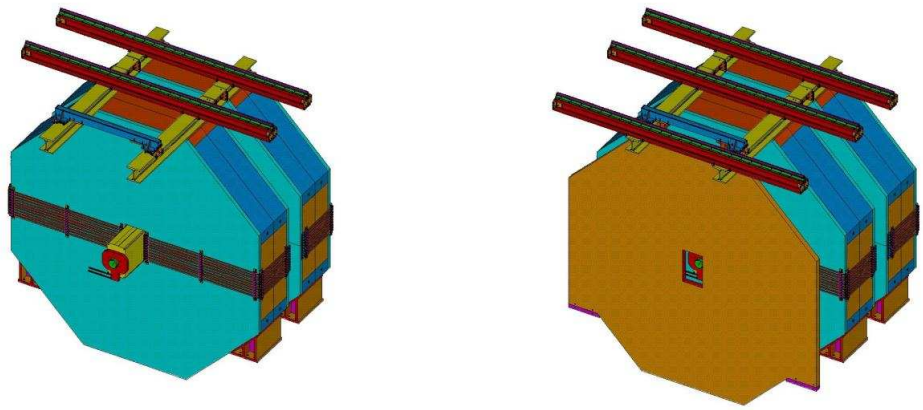

Figure 3.29: Toroid Assembly Steps 13 and 14

3.3.2.5 Assembly Sequence

The optimum sequence for assembling the Vertex Magnet and the first muon toroid assembly is to build the Vertex Magnet first in the C0 Assembly Hall. It would then be moved as far east as possible so that the first toroid assembly can be built while the Vertex Magnet is being tested and measured with the Ziptrack magnetic field measuring device. The 1st toroid assembly would then be rolled into the Collision Hall during the summer 2006 shutdown followed by the Vertex Magnet. If delays occur in either the Vertex Magnet or toroid parts procurements, the assembly and installation order can be reversed. If either assembly is not ready by the last week of the summer shutdown, its installation can be delayed until any convenient 1 week shutdown that might occur during FY2007. This would cause a slight delay in the construction of the 2nd toroid assembly and in the other large spectrometer components but would most likely not jeopardise the overall completion of the spectrometer in FY2009.

3.3.2.6 Installation, Including Hook Up to Utilities and Protection Systems

The connection of the Toroids to the necessary power, LCW, control, and monitoring systems will be done under the supervision of Accelerator Division Electrical Department Staff. The existing ACNET control system and protocols will be employed and Accelerator Division Electrical safety standards will be followed.

The coils for both toroids are operated from one Transrex 240 KW power supply at a current of 1000 Amps. The voltage drop is 10 Volts.

3.3.2.7 Calculations and Analysis

Since the BteV Toroid is installed above the floor of the C0 building, it must be designed to resist the sudden movement caused by seismic or other external forces. Since these objects

are very tall with small bases, we have studied their mechanical stability. The calculations are based on the following assumptions:

- Assuming it is a #1 seismic zone. See Fig. 14 of reference 1.
- The structure is an essential facility.
- Ignoring the small additional weight of the muon chambers.

We applied the following engineering standards and texts: the ASCE Standard "Minimum Design Loads For Buildings and Other Structures" [4], AISC "Allowable Stress Design" [5], and "Foundation Analysis and Design" [6].

We have determined that the Toroid is within safety requirement for stability against overturning from seismic or other external forces.

A similar calculation has been applied to the Muon Filter. The calculated safety factor is less than 1.50 which is recommended by "Foundation Analysis and Design". Therefore the current structural design of the filter is not stable enough and needs to be modified. There are two ways to improve the structural stability: to increase the base contact area of the filter and to install a bolt to anchor the filter with the foundation; or to add a structure such that the lateral force V will be transferred to another structure through the new structure. Studies are currently underway to address this issue, which is not viewed as a difficult problem.

Details of all of the calculations are available as a BTeV Internal Document.

3.3.2.8 Toroid Fields

The field in the toroid has been calculated using finite element analysis. One complication is that the "compensating dipole" magnet is placed in the bore of each pair of toroid magnets. The clearance between the outer boundary of the dipole iron and the inner boundary of the toroid iron is greater than ∼2.5 cm. There are concerns that the field of each magnet may be unacceptably distorted by the presence of the other magnet.

A 2-d ANSYS finite element model of the two-magnet assembly was created to address this issue. The BH used was the same that was applied to the most recent Minos toroid studies, and is based on measurements of MINOS toroid steel. The BH curve is plotted in Figs. 3.30 and 3.31. The total NI/coil for the dipole and toroid magnets were 36333 A-t, and 24183 A-t, respectively.

The geometry of the inserted compensating B2 dipole and the toroid is shown in Fig. 3.32. The field in the dipole across the air gap (line A-B of Fig. 3.32) is shown in Fig. 3.34. No asymmetry of field can be observed on the plot. The vertical sextupole moment is less than 4 Units and is not a problem. Fig. 3.35 shows the field in the dipole iron. Without the toroid, this field would be symmetric top-to-bottom in the figure. But the toroid coil forces much of the dipole flux downward, producing the slight field asymmetry in the return yoke iron of the dipole.

The profile of the field in the toroid iron is shown in Fig. 3.33. The toroid field was plotted along the 0 degree and 90 degree radii. Fig 3.36 shows the field along these two

perpendicular radii. Because the hole in the center of the toroid iron is not square, the iron is about 4% thicker at 0 degrees which accounts for the lower field.

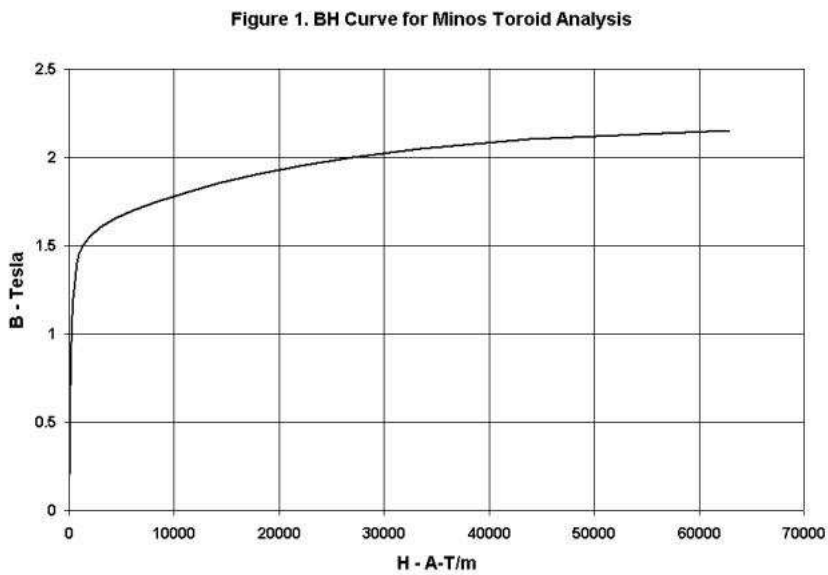

Figure 3.30: BH Curve for MINOS Toroid Steel (properties similar to steel used for BTeV)

3.3.2.9 B2 Dipole Modifications

Each toroid contains in its central hole a 10' B2 Dipole that compensates for the deflection of the Vertex Magnet. Together the two B2 Dipoles and the Vertex Magnet form a "3-bump" that restores the beams to their original trajectories on both sides of the IR. This is discussed below. The dipoles are mounted inside the toroids to save space along the beam direction. Figure 3.37 shows the B2 mounted inside the Muon Toroid. The B2's coil sticks above the profile of the B2's yoke. Space must be left for the coil on the detector end of the B2 to pass through the hole in the toroid in case it becomes necessary to remove the B2 to repair it. This space is filled with a steel or copper absorber plate attached to the B2's yoke, shown in the figure, in order to block the path for hadrons to reach the muon detector. A detailed plan has been developed to permit extraction of the B2, in case of failure, without moving the low beta quadrupoles just outside the C0 enclosure.

3.3.3 Beampipes

The beampipe provides the vacuum for, and encloses, the circulating Tevatron proton and antiproton beams. It must be able to conduct the wall current associated with the circulating

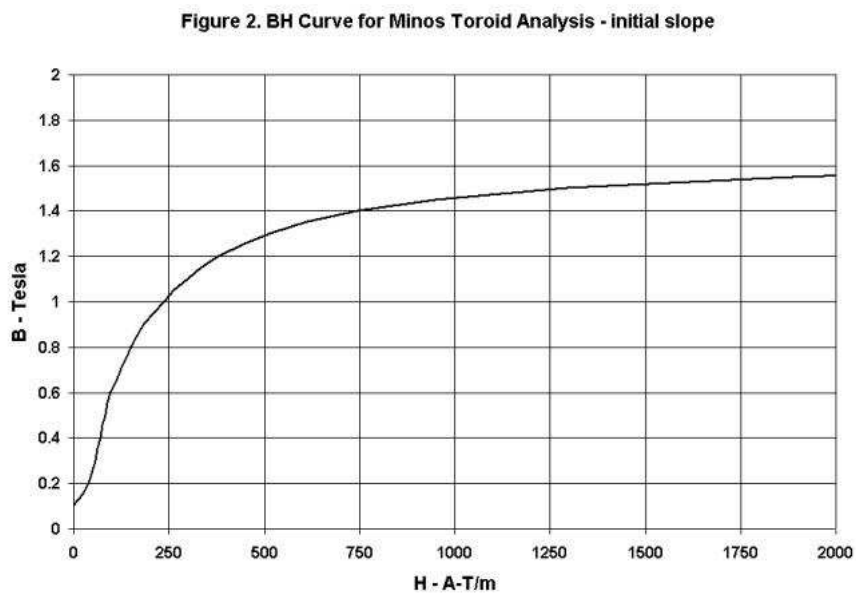

Figure 3.31: Initial Portion of BH Curve for MINOS Toroid Steel (properties similar to steel used for BTeV) showing more detail on the rise towards saturation

beams. It must also be as thin as possible in order to minimize the reinteraction of particles emanating from the collision point.

The plan is to construct the beampipe in sections. The 1" diameter beampipe in the region of the forward tracking chambers will be constructed by modifying the CDF Run IIb beryllium beam pipe. Design work is progressing on specifying the needed modifications.

The 2" diameter beampipe inside the RICH detector will be assembled from the existing CDF Run I beryllium beampipe. The existing pipe will be cut to the desired length and retrofit with appropriate flanges to enable it to be integrated into the spectrometer.

A third component of the beampipe assembly is the torispherical thin-walled flange/window that transitions from the 1" beampipe section onto the face of the pixel vacuum tank. It will be fabricated from spun aluminum. Special thin-walled flanges and ion pumps complete the beampipe assembly.

The torispherical window must provide a connection for attachment to the accelerator vacuum pipe. It must also terminate the pixel vacuum box while minimizing the amount of material that particles produced in the interactions must traverse before reaching the downstream detection elements of the spectrometer. To accomplish this, we have designed an aluminum formed head, following the guidelines in the ASME Boiler and Pressure Vessel Code. The head thickness of 0.023 inch (0.58 mm) is the required thickness according to

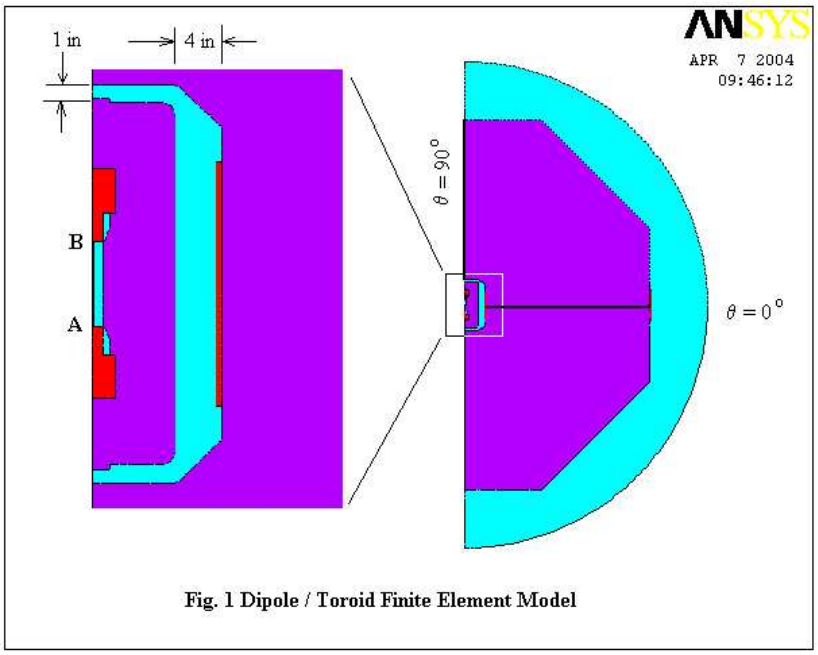

Figure 3.32: Geometry of the compensating dipole and toroid. Shown are the dipole coils, dipole iron, location of the toriod coils, and the toroid iron.

the Code for a head diameter of 20 inches (508 mm). Figure 3.39 shows this window. Its relation to the interaction point is shown in Fig. 3.40.

An analysis was performed with the structure under an internal pressure of 14.7psi. The safety factor for the design is three times the yields stress of aluminum. The maximum deflection is 0.024 inch (0.61 mm). The transition to the beam pipe has a radius of 0.1 inch. When the front of the head sits at z=65 cm from C0, the largest thickness through which a particle travels within the detector acceptance is 0.036 inch (0.91 mm).

The current flange design is for a metal wire seal. Research and analysis must take place to understand the best available option to seal the window to the vacuum vessel and how to fabricate the custom-made flange. We will also have to research how to best fabricate a uniformly thin-walled aluminum head with such large diameter.

3.4 Power Supply Summary

The BTeV Detector uses three types of high current magnets. The parameters for these magnets are listed in Table 3.3. Power supplies will be reclaimed and recommissioned from experiments and beamlines that have been decommissioned. Note that the power supplies widely known at Fermilab as “Transrex” supplies are now manufactured under the name PEI. These power supplies will be cooled by Low Conductivity Water supplied from the Tevatron tunnel.

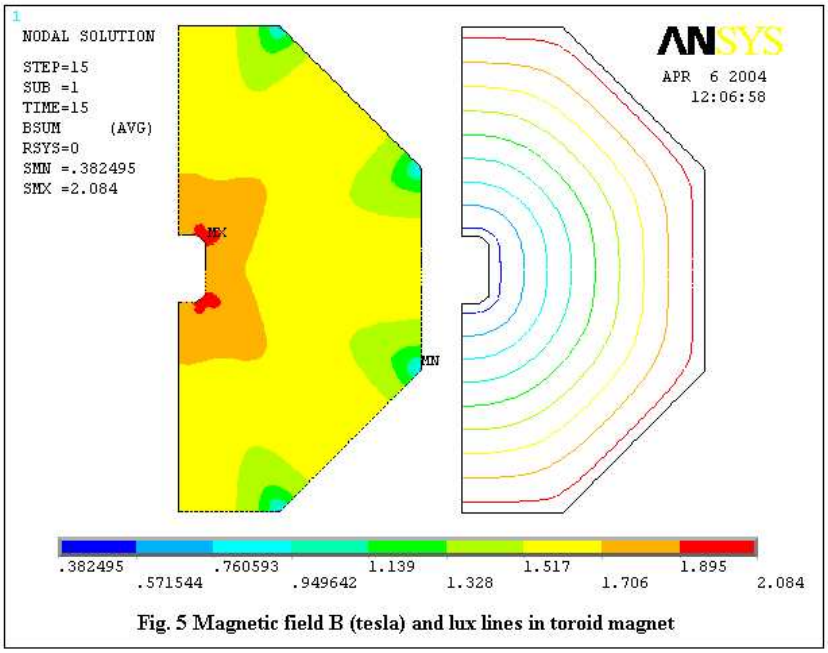

Figure 3.33: Field in the toroid iron (shown for 1/2 of the toroid).

Table 3.3: Voltage and Current Requirements and Power Supplies for Magnets

Magnet	Vertex Magnet	B2 Dipole	Toroid
Number of Elements:	1	2	1
Current(Amps):	4200	2300	1000
Voltage(Volts):	120	8	10
Power Supply Type/number:	Transrex 500KW/2	Transrex 500 KW/1	Transrex 250KW/1

3.5 Integration and Testing Plan

This section describes the full chain of integration and testing of the Vertex Magnet, muon toroids, and beampipes after they have been properly installed at C0. The alignment of these elements in the overall C0 alignment system is also described.

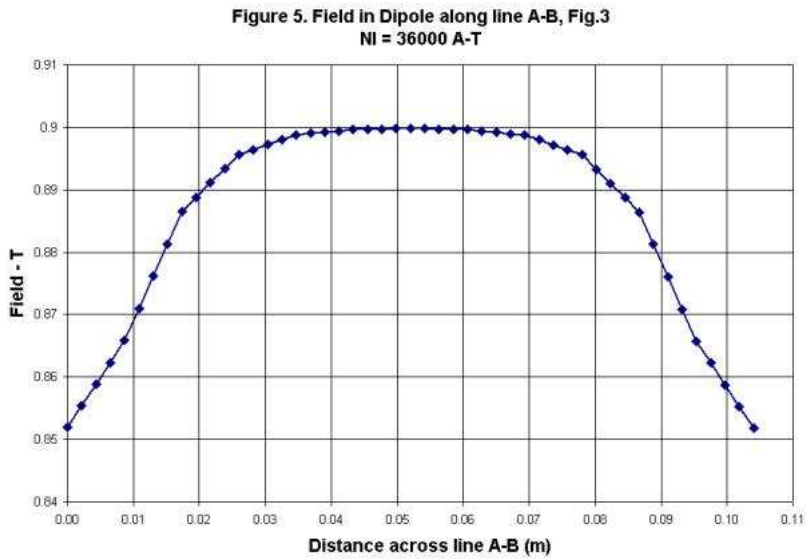

Figure 3.34: Field in the compensating dipole along the line AB of Fig. 3.32 for NI = 36333 A-T

3.5.1 Vertex Magnet tests and integration into the BTeV spectrometer

After assembly in the C0 Assembly Hall, the Vertex Magnet will be temporarily connected to its power supply (which also sits in the Assembly Hall). The magnetic field monitor, controls and safety connections will be installed on the magnet. The magnetic field will be extensively measured using the Ziptrack magnetic field measuring device.

After the Vertex Magnet is rolled into its final location in the C0 Collision Hall, the permanent power, control, and safety connections will be made. The remote operation, readout, and control of the magnet and its safety systems will be checked. The ability of the current in the magnet to follow the MDAT ramp of the main Tevatron magnet excitation current will be verified.

After allowing at least two weeks for any potential settling of the Collision Hall floor, the magnet will be shimmed into its exact final location with respect to the primary Tevatron tunnel survey monuments. Secondary fiducial marks will be mounted on the walls and floor of the Collision Hall and on the magnet to facilitate continued monitoring of the survey location of the magnet, and BTeV spectrometer detector elements, during the lifetime of the BTeV spectrometer.

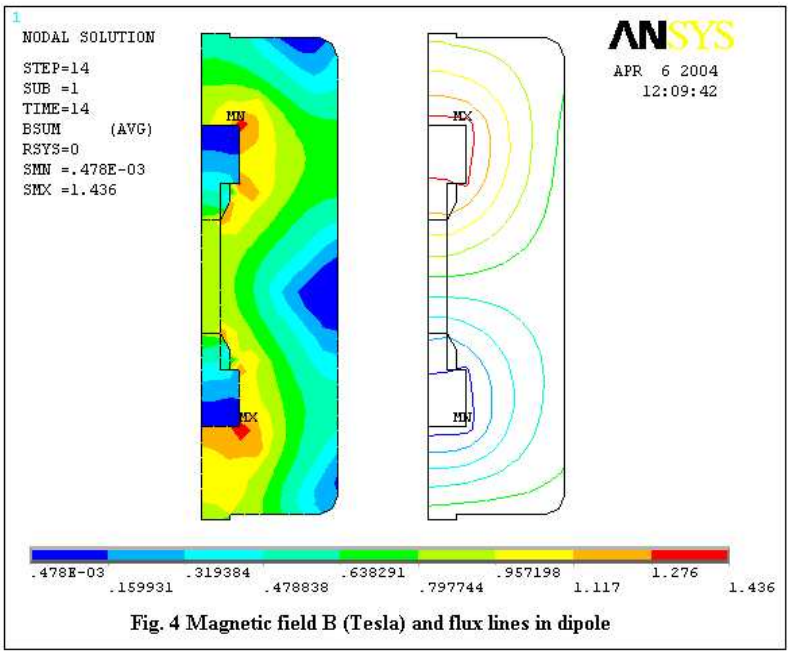

Figure 3.35: Field in the compensating dipole iron showing asymmetry in the top and bottom return yokes due to the Toroid

3.5.2 Toroid tests and Integration into the BTeV spectrometer

After assembly in the C0 Assembly Hall, the muon toroids, with their embedded compensation dipoles, will be temporarily connected to their power supplies (which also sit in the Assembly Hall). The magnetic field monitor, controls and safety connections will be installed on the toroids and compensating dipoles. The magnetic fields will be extensively measured using the Ziptrack magnetic field measuring device.

After the muon toroid assembly is rolled into its final location in the C0 Collision Hall, the permanent power, control, and safety connections for the toroids and compensating dipole will be made. The remote operation, readout, and control of the toroids and compensating dipoles and their safety systems will be checked. The ability of the current in the compensating dipole to follow the MDAT ramp of the main Tevatron magnet excitation current will be verified.

After allowing at least two weeks for any potential settling of the Collision Hall floor, the muon toroid assembly will be shimmed into its exact final location with respect to the primary Tevatron tunnel survey monuments. The compensating dipoles will then be adjusted with respect to the toroids so that they are precisely aligned with the Tevatron beamline. Secondary fiducial marks will be mounted on the toroids and compensating dipole to facilitate

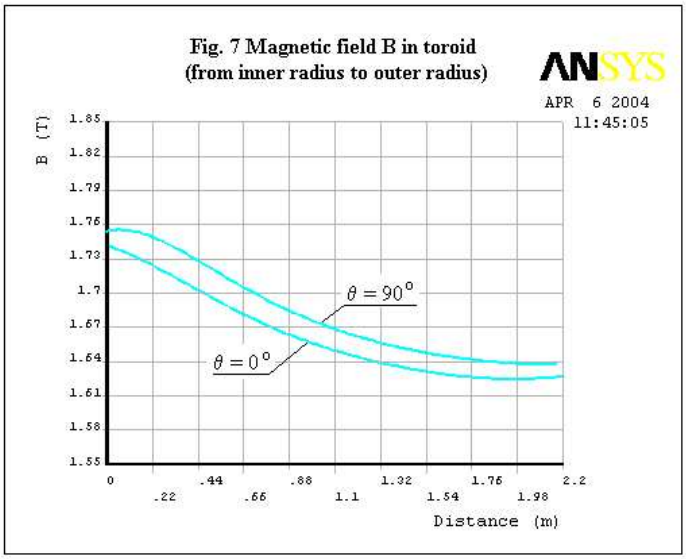

Figure 3.36: Azimuthal field in the Toroid at 0 and 90 degrees

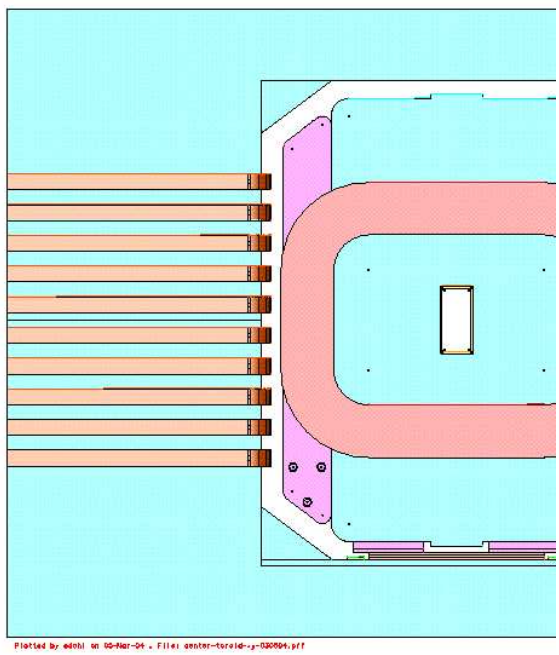

Figure 3.37: B2 as it is mounted in the hole of the Muon Toroid

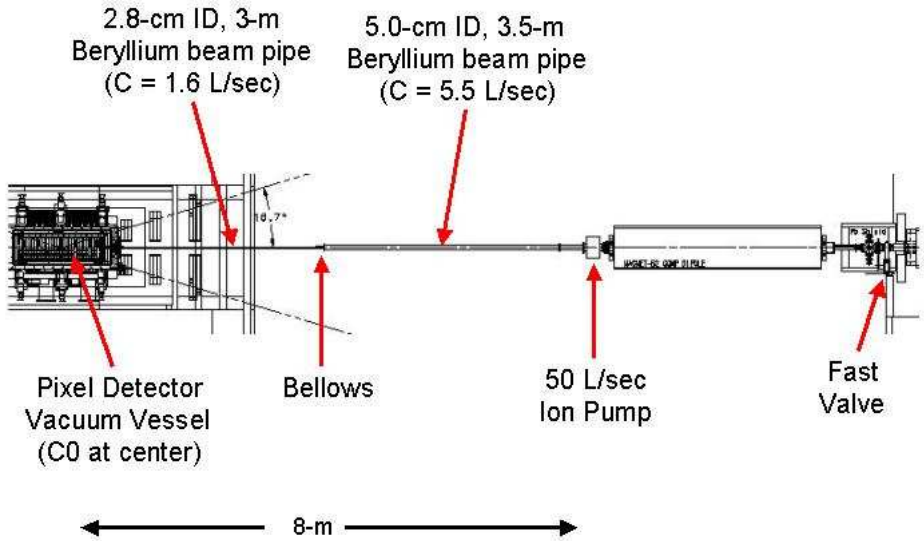

Figure 3.38: Schematic of Beampipes in BTeV

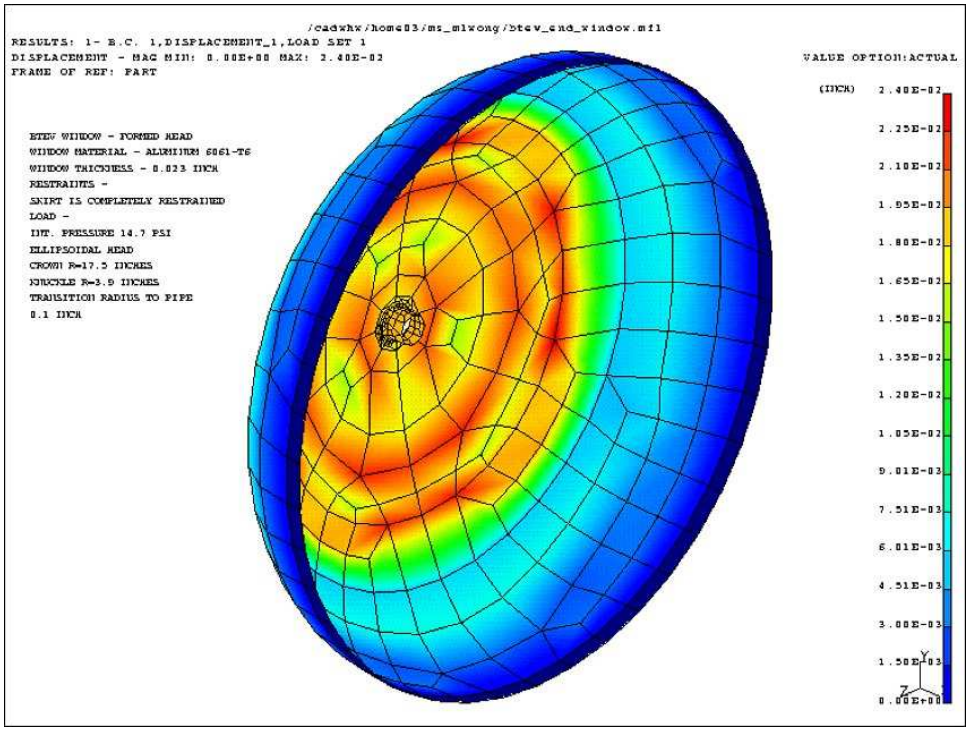

Figure 3.39: Displacement analysis of Pixel Vacuum Window

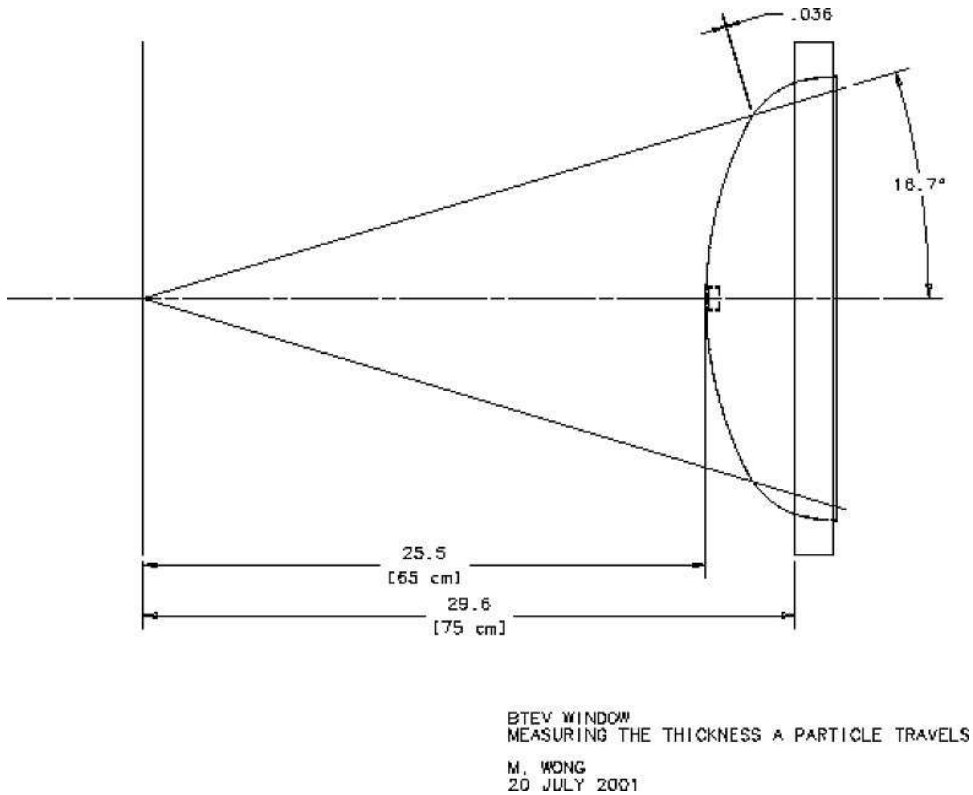

Figure 3.40: Relation of Pixel Vacuum Window to interaction point

continued monitoring of the survey location of these elements, and the BTeV spectrometer muon detectors, during the lifetime of the BTeV spectrometer.

3.5.3 Tests and Integration of the beampipe sections into the BTeV spectrometer

The three major beampipe sections, the torispherical shaped end wall of the pixel vacuum tank, the 1" beryllium tracking chamber beampipe, and the 2" beryllium RICH counter beampipe, will be fully instrumented and tested at a location remote from C0. They will be transported to C0 at the appropriate stage of the spectrometer installation so that they can be placed in their final configuration. They will replace equivalent sections of conventional Tevatron beam pipe that will be in place during the various stages of the spectrometer installation before the final installation of the pixel detector, forward tracking chambers, and RICH counter.

After installing a beampipe section in the spectrometer, all pumping ports, flanges, and vacuum monitoring connections will be made. The vacuum must be restored to better than 10^{-7} torr at each stage of the installation. The beampipe will then be survey aligned with

an accuracy of 10 mils with respect to the Tevatron centerline. The operation, readout, and control of the beampipe vacuum remotely by computer will then be checked.

In addition, a protective shield will be installed to protect the thin beryllium pipes from all accidental contact with sharp or dropped objects. The protective covering will be removed as a last step before closing the Collision Hall and preparing for beam.

3.6 Completed and Planned R&D

3.6.1 Vertex Magnet

The Vertex Magnet is based on the existing SM3 magnet (built in 1982). The SM3 magnet was assembled by welding together, in place, various blocks of iron recovered from the Nevis Cyclotron. In order to better understand any problems that might arise during the disassembly of this all-welded magnet, a test disassembly of the magnet was undertaken in 1999. A contract was written to remove the flux plates from SM3 and also to dismount 2 of the 30-ton side iron blocks. The disassembly went well.

A search for the original assembly prints and engineering notes from 1982 was also successful. These notes and prints, as well as the disassembly test, form the basis for our estimate of the cost of the full disassembly and will form the basis of the final design of the Vertex Magnet.

Further studies with magnetostatic modeling programs are planned in order to better characterize the fringe field of the Vertex Magnet design. These fringe fields might need to be reduced with an additional small amount of soft iron shielding in order to protect the detectors from magnetic field distortion.

3.6.2 Muon Toroids

It is planned to obtain the 24 large iron slabs that form the toroids from the existing SM12 magnet in the MEast Spectrometer. The SM12 magnet has 36 30-ton exterior iron return yoke blocks, 24 of which can be recovered without fully disassembling the SM12 magnet. These 30 ton pieces are identical to the sidepieces of the SM3 magnet, and are held in place with similar welds. Thus the disassembly test on SM3 in 1999 is applicable to the cost estimation and final design of the toroids utilizing these pieces. Design work is well along on specifying the final assembly including the mounting points for the muon detectors, the extra absorbers around the beampipe, and the insertion of the compensation dipole. Magnetostatic modeling of the toroid and its embedded dipole has had an affect on the details of the final design.

3.6.3 Beampipes

The 1" diameter beampipe in the region of the forward tracking chambers will be constructed by modifying the existing CDF Run IIb beryllium beam pipe. Design work is progressing

on specifying the needed modifications including the design of the low-mass, welded flange between this beam pipe and the 2" RICH beam pipe. The techniques for cleaning and heating this beampipe to achieve the required high vacuum must also be studied.

The 2" diameter beampipe inside the RICH detector will be assembled from the existing CDF Run I beryllium beampipe. The existing pipe will be cut to the desired length and retrofit with appropriate flanges to enable it to be integrated into the spectrometer. The flange at both end of this 2" beryllium pipe is specified to be minimum thickness. R&D is needed to develop an acceptable design.

The torispherical thin-walled flange/window that transitions from the 1" beampipe section onto the face of the pixel vacuum tank will need to be prototyped at reduced scale to understand the mechanical and vacuum properties of such a design.

The specifications of other flanges and ion pumps in the complete beampipe assembly must also be studied in order to understand the assembly, vacuum and beam impedance issues that arise. The window, the 1" beryllium pipe, and the 2" beryllium pipe are all connected via low-mass welded flanges.

3.7 Vertical Trajectory of Beams in C0

The BTeV Vertex Magnet is a dipole with its magnetic field oriented perpendicular to the direction of the beam. The magnet is centered in Z on the Collision point which is in the center of the Collision Hall. In order to fit the magnet into the C0 Collision Hall and for reasons related to servicing the experimental apparatus, BTeV bends particles, and the two beams, vertically.

The vertical deflection of the beams by the Vertex Magnet must be compensated by two 10 foot long B2 dipoles with fields oriented opposite to that of the Vertex Magnet and located ± 9.7 m from the Collision Point [7]. The Vertex Magnet has a vertical kick of 5.2 Tesla-m. The B2's dipoles each have a vertical kick of 2.6 Tesla-m at 980 GeV. The full apertures of the B2 magnets (inside the vacuum pipe) are 3.902" (in the B2 end plane) x 1.902" (out of B2 bend plane). The BTeV pixel detector, rather than the Vertex Magnet, will be the limiting aperture at the Collision Point [8] except during injection and ramping when the pixel detector will be retracted.

The magnets form a "3-bump" that deflects each beam up by 7.6mm at the Collision point. The beams enter and exit the C0 Collision Hall on the same trajectory they would have if there were no magnet. The geometry of the system is shown in Fig. 3.41.

These magnetic elements are all located inboard of any quadrupole magnets so their operation can be decoupled from the Tevatron Optics. Two modes are possible:

- The Vertex Magnet and the two B2 magnets can be kept off during injection, ramping, and squeezing and energized only after collisions have been established; or
- The Vertex Magnet and the B2 magnets could be programmed to follow the Tevatron ramp from 150 GeV injection to 980 GeV collision energy.

Depending on the low field behavior of the Vertex Magnet and the B2 dipoles, the aperture of the pixel detector while retracted, and any complications with controls, either mode could be chosen. Note that the toroids will not be ramped in either case. The results of the magnet measurements on the vertex dipole and the compensating dipoles will determine the best mode of operation.

Although BTeV will require the full low-β insertion in order to take data, BTeV has requested that the C0 area be returned to a conventional straight section and the elements of the dipole spectrometer be installed earlier for apparatus testing and commissioning. The Accelerator Division has stated that the B2 apertures will not limit the separated orbits at injection or through collision for the existing (Collins straight section) configuration during BTeV testing, low-β insertion, or CDF/D0 Run II operations. The β functions for the two configurations are listed in table 3.4.

Table 3.4: Typical β functions for various modes of BTeV running

	existing Collins Straight at collision, injection similar		John Johnstone Triplet
z (m)	β_x	β_y	$\beta_x = \beta_y$
-11.2 B49 and of B2	61.9 m	84.9 m	330 m
-8.2 C0 and of B2	63.7 m	81.2 m	200 m
0.0 C0 IP	69.7 m	72.1 m	0.35 m
+8.2 C0 end of B2	78.2 m	65.5 m	200 m
+11.2 C11 end of B2	81.9 m	63.6 m	330 m

The expected multipole field expansion for the Vertex Magnet, based on the electrostatic simulation, is small compared with any one of the superconducting bend magnets in the Tevatron lattice. Nevertheless, the multipole content of Vertex Magnet field will be measured before installation in the Tevatron. The multipole fields for the 10 foot long B2 magnets are known and are small.

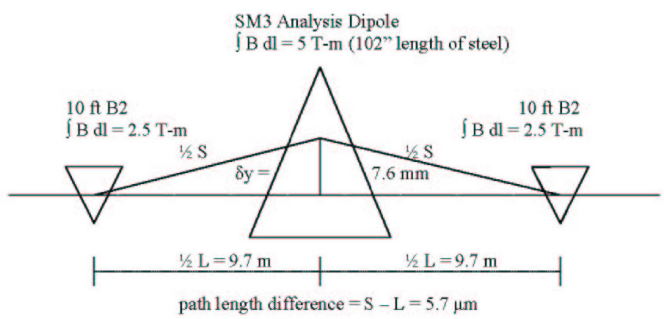

Figure 3.41: The Geometry of the BTeV Vertical Bending Spectrometer

Bibliography

[1] see Fermilab Beams-Doc 877

[2] http://ppd.fnal.gov/experiments/e907/Meetings/collab8/holger2.pdf

[3] See the Trigger Chapter in Part 4 for further details.

[4] ASCE Standard "Mini. Design Loads For Buildings and Other Structures" (11/27/1990)

[5] AISC "Allowable Stress Design" 9th Edition

[6] "Foundation Analysis and Design" 3rd Edition by Joseph Bowles

[7] This situation is different than for the currently running experiments in B0 and D0 whose spectrometer magnets are solenoids with their fields parallel to the beam and thus do not deflect them.

[8] http://www-ap.fnal.gov/∼peterg/btev_ip_sept03/btev_1596_v3.pdf.