C0 Interaction Region (WBS 2.0)

Mike Church (WBS 2.0)

Overview

- Introduction
- Technical components
- Cost and Schedule
- Project flow, critical path, and risk analysis
- Breakout talks
- Glossary of terms

Requirements

- Provide an interaction region at C0 with $\beta^* < 50$ cm
- Support luminosity of >1E32 $cm^{-2}sec^{-1}$
- Keep magnetic components clear of C0 Collision Hall
- Maintain capability of running CDF and D0 experiments
- Complete installation in the 2009 shutdown
- Reuse as much Tevatron infrastructure as possible

Tevatron C0 Region

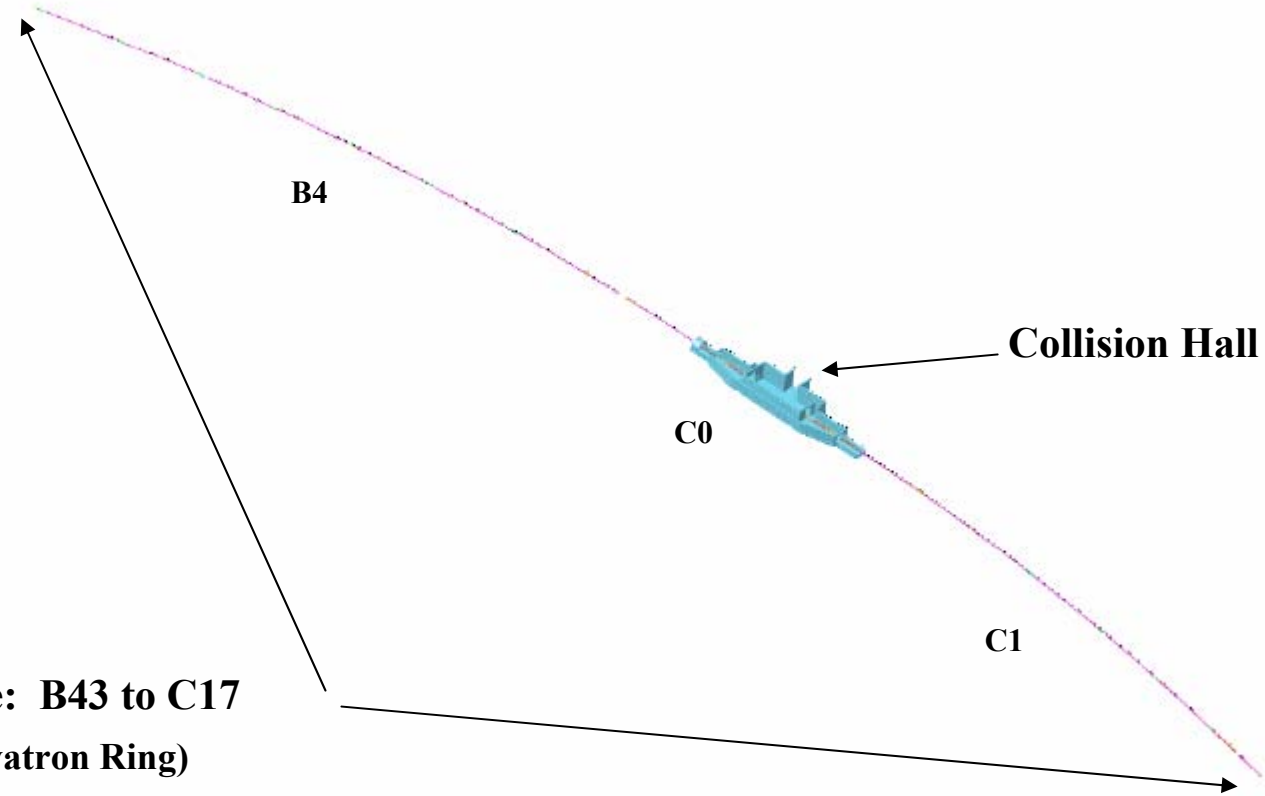

Tevatron beamline: B43 to C17

(445 m, 7% of Tevatron Ring)

+ B4, C0, C1 service building installations

+ remove 4 magnets @A4/B1

+ modify a few corrector circuits

- C0 collision hall (after 2005)

C0 IR Major Technical Components

- New LHC-type quadrupole magnets (10 installed)
- New spools (10 installed)
  - "spool" == corrector magnets, power leads, safety leads, …..
- Electrostatic separators (6 installed)
- Power supplies
- Nonmagnetic cryogenic elements
  - cryogenic bypasses, cryogenic spacers, "turnaround" cans, ….
- Infrastructure modifications
  - cryogenic headers, shielding, controls, software, operations, ….

- Installation in 2005, 2007, 2008, 2009 shutdowns

Organization

Base cost: $28.1M (Material: $15.5M, Labor: $12.6M)

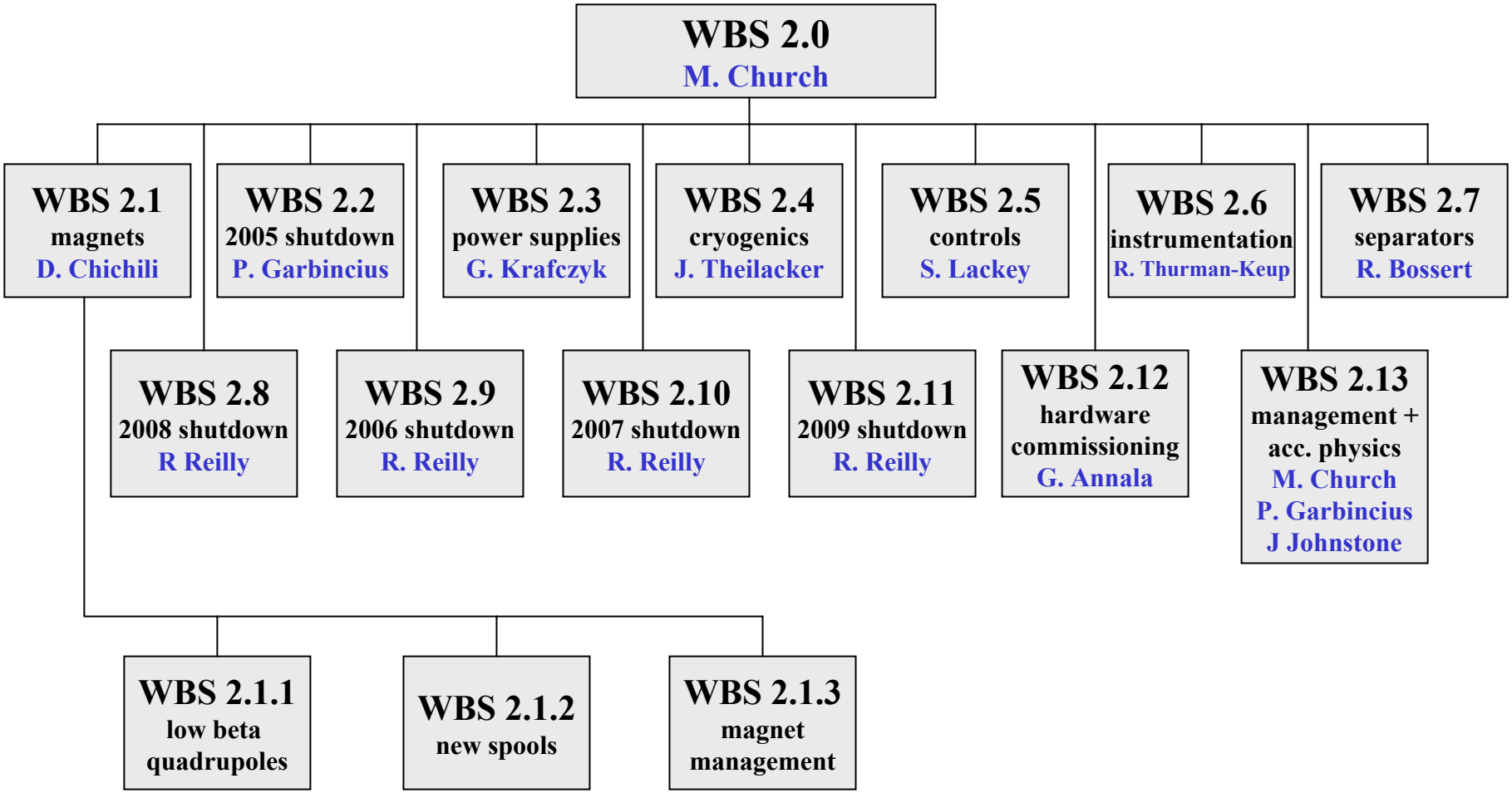

Lattice

Features:

- **35 cm β^***
- **Insertion adds 1 unit tune in each plane**
- **Insertion is optically matched to the rest of Tevatron at all stages of operation**
- **Magnetic elements stay outside C0 collision hall**
- **Two modes of operation:**
  - **collisions @ C0 or**
  - **collisions @ B0 and D0**

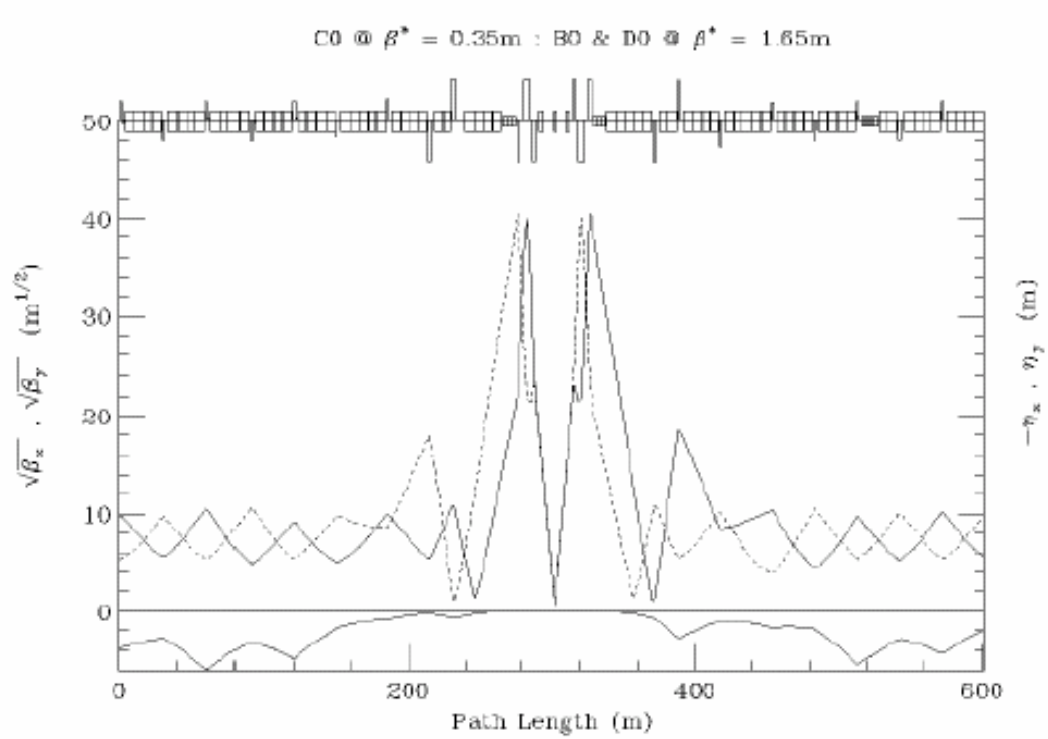

C0 collision lattice

The lattice design is mature, and any future modifications are on the level of fine tuning.

Beam Halo

Scenario	n	$h^{\pm}$	$e^{\pm}$	γ	$\mu^{\pm}$
No B48, no wall	24.2	14.5	58.9	1147	2.80
B48, no wall	11.0	9.29	42.4	730	1.81
B48, 2m wall	6.29	2.48	7.55	132	1.00

10^5 particles/sec entering collision hall (R<3.5m)

Source	D0	B0	C0
Nuclear elastic beam-gas	8.8	8.0	9.4
Large angle Coulomb beam-gas	0.12	0.06	0.1
Tails from collimators	2.4	3.5	0.99
Elastic p-pbar at two IP's	0.144	0.105	-

beam loss rates (10^4/sec) u.s. and d.s. of IP's

Beam halo calculations have been completed. Background rates are reduced a factor of ~10 with shielding and new collimator.

Tune Footprints

Antiproton bunch #6 tune footprint with 270E9 protons.

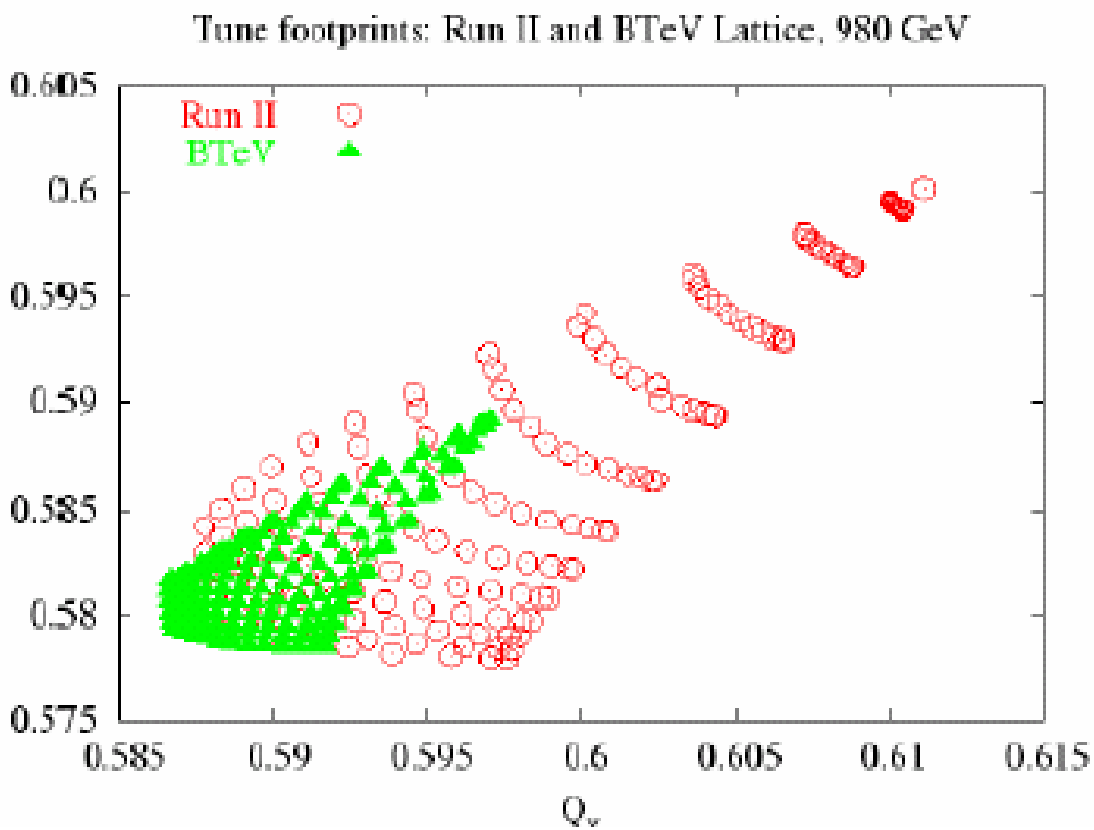

Low Beta Quads

Features:

- Modified LHC design – cold mass is nearly identical; cryostat is redesigned to fit into the Tevatron tunnel
- Length varies from 1.4m to 4.4m
- Required current is 9560A
- 10 magnets to be installed: 2 x (Q1-Q5)

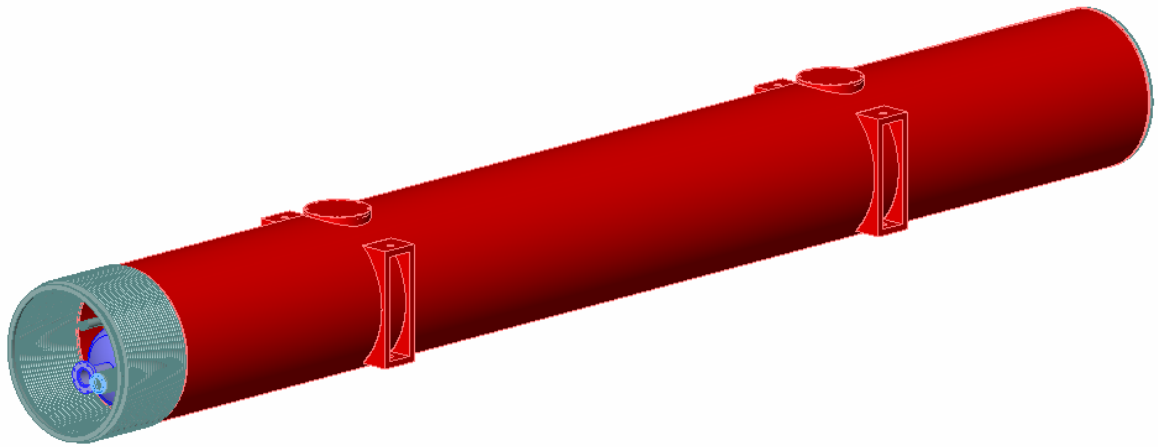

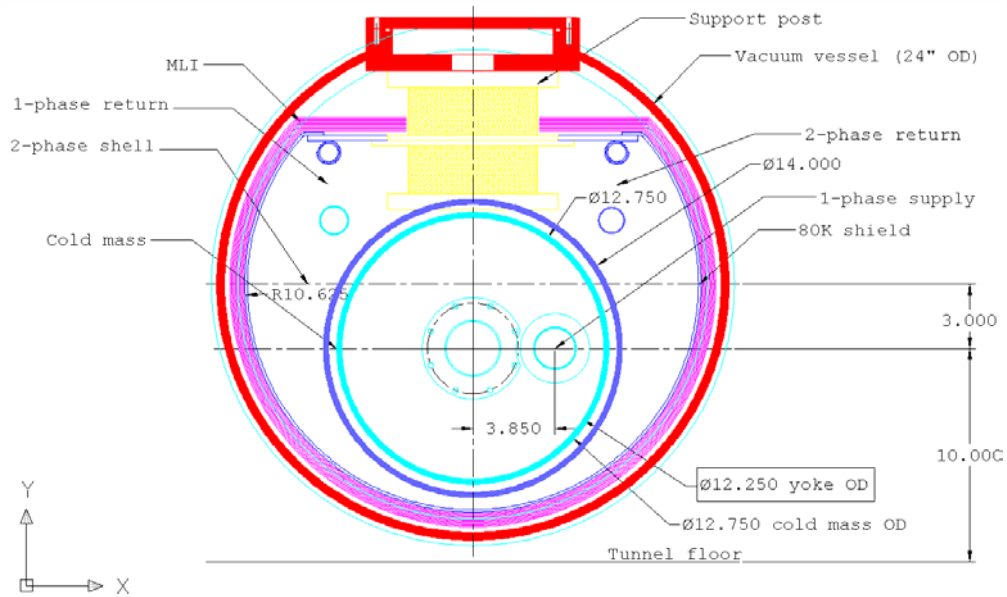

Spools

- 10 spools to be installed (3 types)
- Corrector packages contain V dipole, H dipole, quad, skew quad, or sextupole coils
- 10KA HTS leads provide power to adjacent quadrupoles

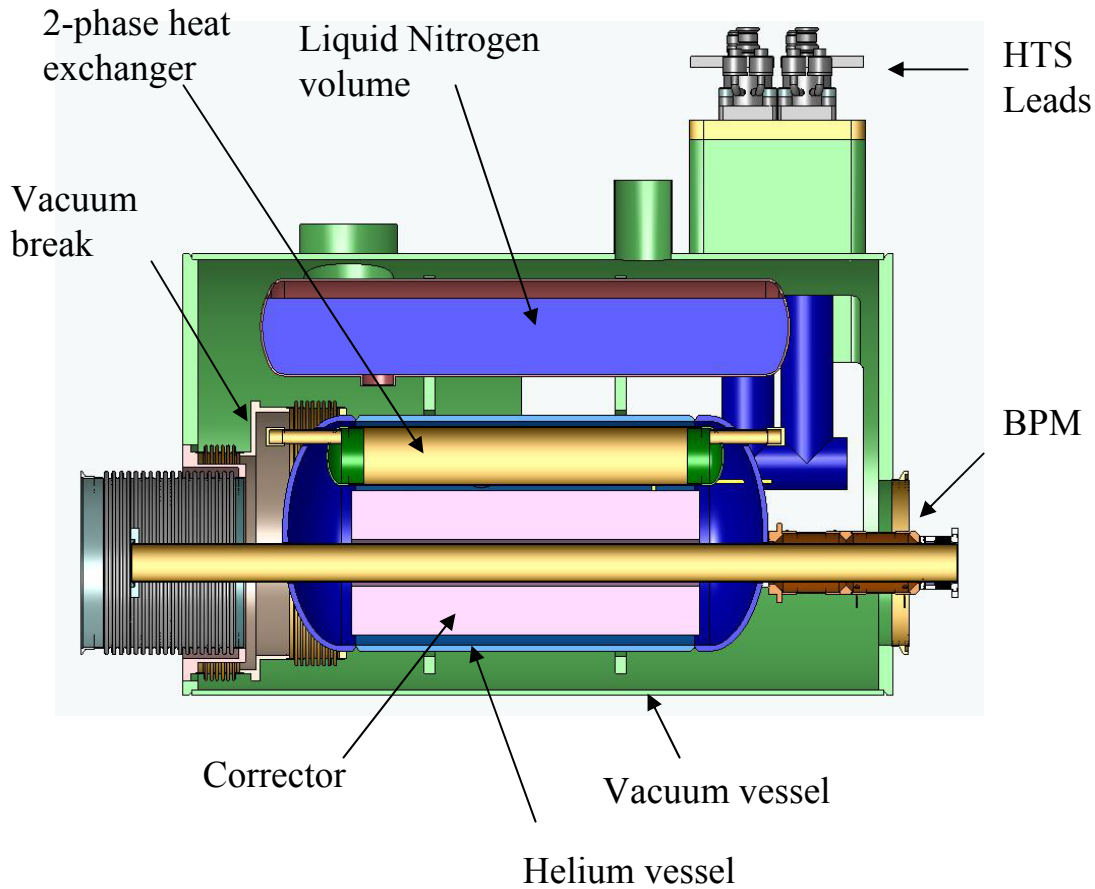

X2 spool

HTS Leads

- 6KA lead pairs have been used in the Tevatron for ~3 years
- We have successfully tested these lead pairs to 10KA under pressure and temperature conditions similar to Tevatron operations
- Baseline proposal is to use 7 of these lead pairs already in hand and purchase 6 more with identical external dimensions

HTS == High Temperature Superconductor

American Superconductor Co

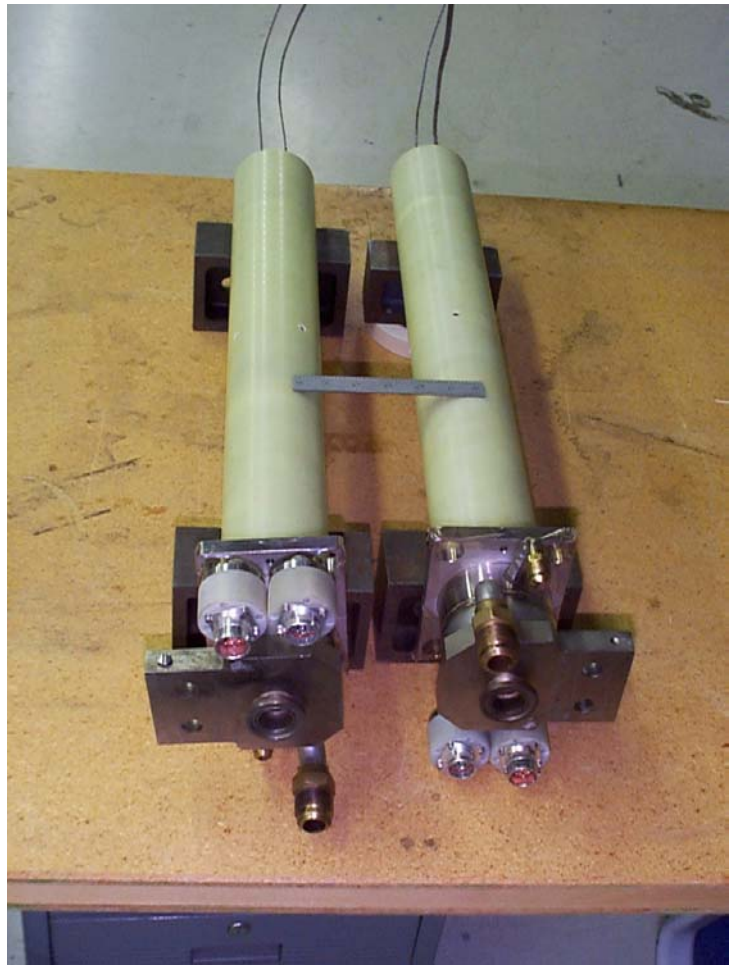

Corrector Magnets

		Corrector Magnets					
Spool	**Slot Length, m**	**VD T. m**	**HD T. m**	**SQ T.m/m**	**Sx T.m/m2**	**Q* T.m/m**	**Total per Spool**
X1V	1.83	**0.48**			**450**	**25**	**3**
X1H	1.83		**0.48**		**450**	**25**	**3**
X2	1.43	**0.48**	**0.48**				**2**
X2	1.43	**0.48**	**0.48**				**2**
X3	1.43	**0.48**	**0.48**	**7.5**			**3**
X3	1.43	**0.48**	**0.48**	**7.5**			**3**
X2	1.43	**0.48**	**0.48**				**2**
X2	1.43	**0.48**	**0.48**				**2**
X1V	1.83	**0.48**			**450**	**25**	**3**
X1H	1.83		**0.48**		**450**	**25**	**3**

Baseline proposal is to use a BNL design

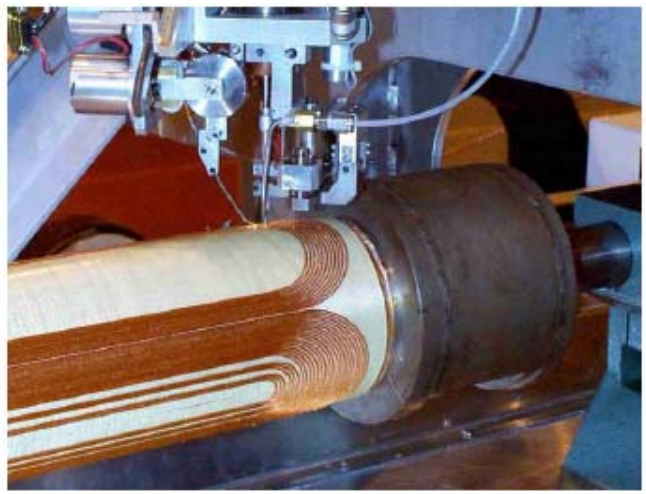

Nonmagnetic Cryogenic Elements

9 new nonmagnetic cryogenic elements will be installed for the C0 IR project: bypasses, spacers, "turnaround" cans

These elements house cryogenic piping for helium and nitrogen, and carry superconducting cable for the main Tevatron bus.

Modifications to the Tevatron helium and nitrogen headers will also be made in order to make room for the new magnets.

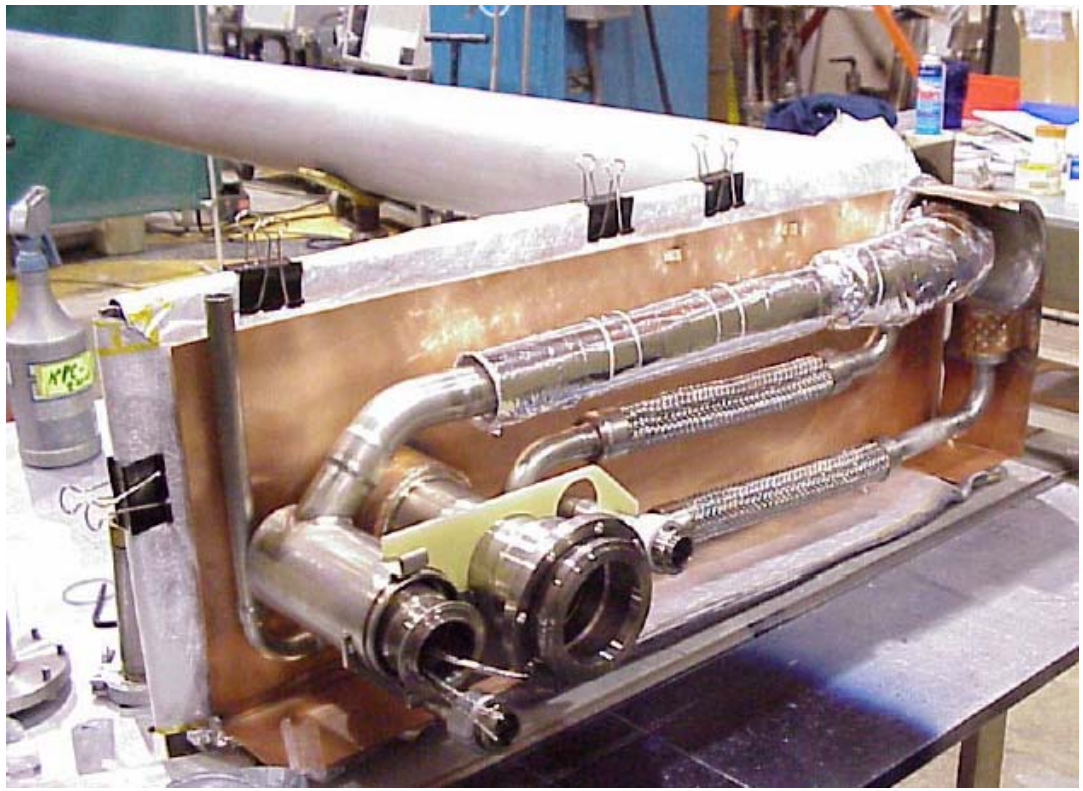

Electrostatic Separators

6 electrostatic separators will be installed for the C0 IR project.

These separate the proton and antiproton beams onto helical orbits.

These are identical in design to the separators currently in use in the Tevatron. Currently new separators are being fabricated and tested as part of the Run II upgrades.

Power supplies and polarity switches will also be built as part of this project.

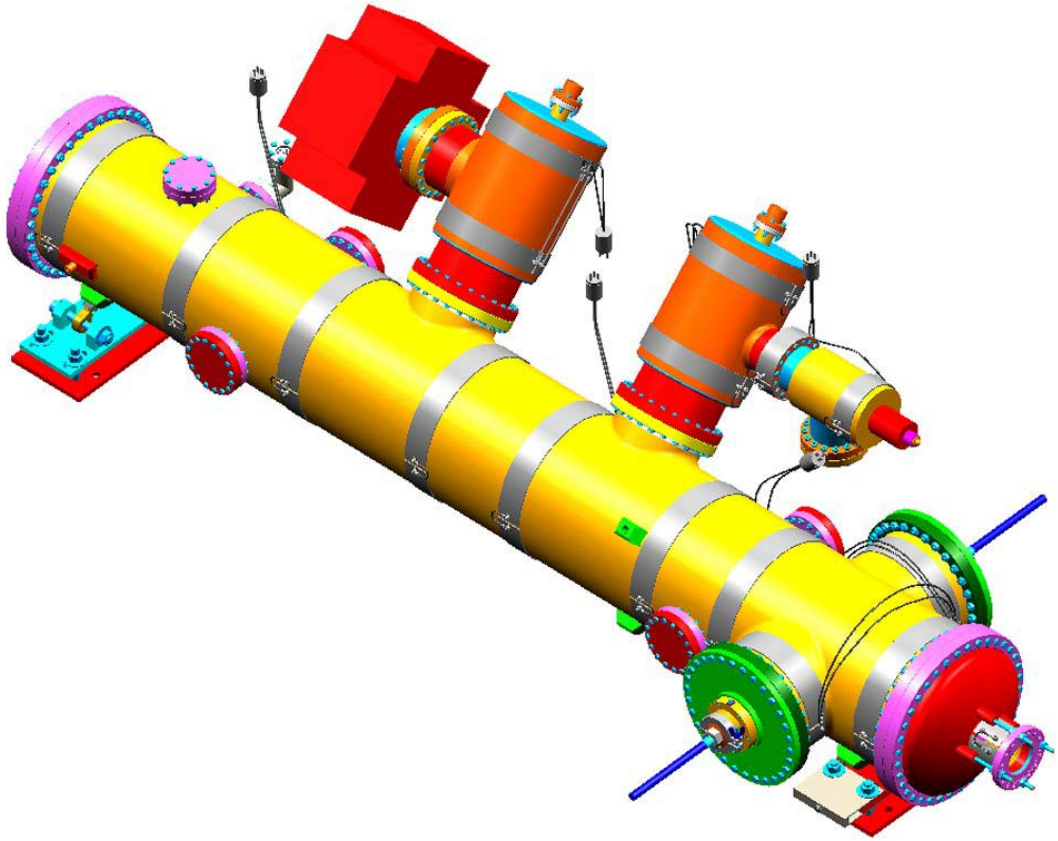

Power Supplies

In addition to separator power supplies, the following power supplies are required:

- 3 10KA supplies for LHC-type quadrupoles
  - Similar to successful MI design, but with lower voltage
- 4 5KA supplies for reused Tevatron Q1 quads
  - Similar to successful MI design, but with lower voltage
- 2 200A shunts for LHC-type Q1/3 quadrupoles
  - Based on recent design for MI dipoles installed @ C0
- 26 100A supplies for the corrector magnets
  - Similar to MI design, but with additional quench detection circuitry

2005 Shutdown

The C0 straight section must be reconfigured to allow staged installation of the BTeV detector.

Currently the Tevatron uses MI dipoles to complete the bend at C0. These extend into the C0 collision hall.

These will be removed and full length Tevatron dipoles will replace the half-length dipoles currently in B4 and C1.

2006 – 2009 Shutdowns

- 2006 shutdown
  - no work currently planned
- 2007 shutdown (2 months)
  - LCW (Low Conductivity Water) and buswork installation
- 2008 shutdown (2 months)
  - LCW and buswork installation continued
  - Removal of Q1s and P-spools from A4 and B1
  - Modification of cryo headers at B4 and C1
- 2009 shutdown (4 months)
  - Full installation of C0 IR components
  - Almost all devices between B43 and C17 get moved or replaced
    - Move 23 dipoles, install 28 quads/spools, 7 cryogenic devices, 6 separators, 2 shield walls, 2 collimators

Construction Cost

To be provided by BTeV Management

M&S Cost Profile by Fiscal Year

To be provided by BTeV Management

Labor Profile by Fiscal Year

To be provided by BTeV Management

Project Flow

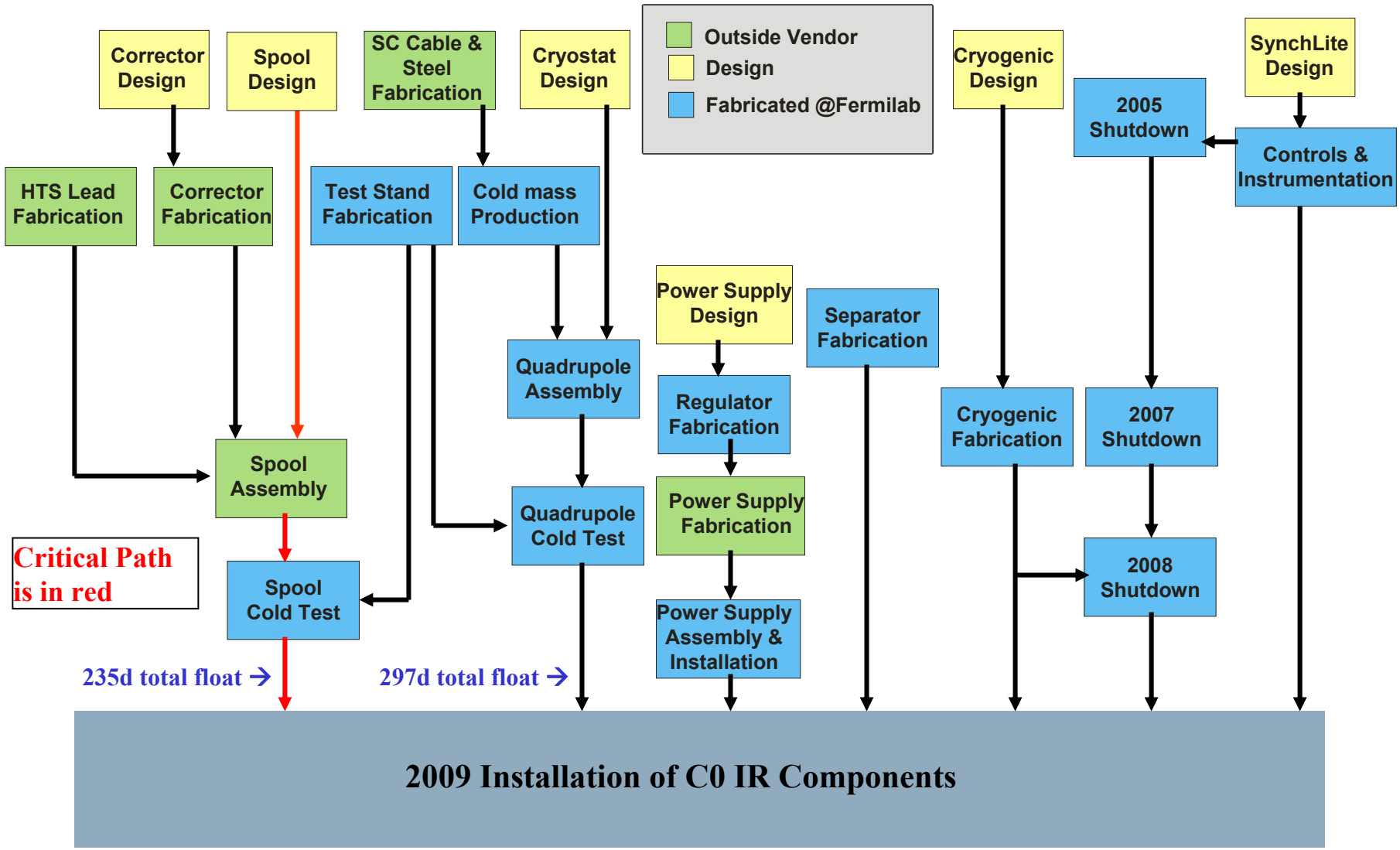

Key Milestones with Distributed Float

- Initiate procurement of corrector magnets (4/05)
- Initiate procurement of superconducting wire (5/05)
- Initiate procurement of HTS leads (3/06)
- Begin quadrupole production (11/06)
- Begin spool assembly (3/07)
- Complete quadrupole fabrication and test (10/08)
- Complete spool fabrication and test (4/09)

(RED items are on critical path)

Critical Path Without Distributed Float

1.2.3	SPOOL ASSEMBLY	02Feb04	12Mar09	1291d
1.2.3.1	Spool Design	02Feb04	06Mar06	531d
1.2.3.1.1	Spool Design: Pre-Conceptual R&D	02Feb04	30Sep04	171d
1.2.3.1.1.1	Conceptual Design	02Feb04	30Sep04	171d
1.2.3.1.2	Spool Design: FY05/06 R&D	01Oct04	06Mar06	360d
1.2.3.1.2.1	Design and Detailing	01Oct04	06Mar06	360d
1.2.3.2	Spool Fabrication: Construction	13Dec05	22Oct08	725d
1.2.3.2.1	Fabrication Study	13Dec05	06Mar06	60d
1.2.3.2.2	Bidding Process	07Mar06	26Jul06	100d
1.2.3.2.3	Contract Award and Production Duration	27Jul06	18Aug08	520d
1.2.3.2.4	SC: 1st Spool Delivery Contingency Task	20Oct06	20Oct06	0
1.2.3.2.5	1st Spool Assembly Fabrication & Test	20Oct06	30Oct07	260d
1.2.3.2.6	SC: Contingency Task for Drop in Production Rate	31Oct07	31Oct07	0
1.2.3.2.7	Series Production and Oversight	31Oct07	18Aug08	200d
1.2.3.2.8	Spool Cold Tests	10Jan08	21Oct08	200d
1.2.3.2.9	BTeV Corrector Powering System	02Jan06	31May07	360d
1.2.3.2.10	Magnetic Measurement Probe System	02Oct06	18Jun07	180d
1.2.3.2.11	Warm Bore Tube	02Oct06	18Jun07	180d

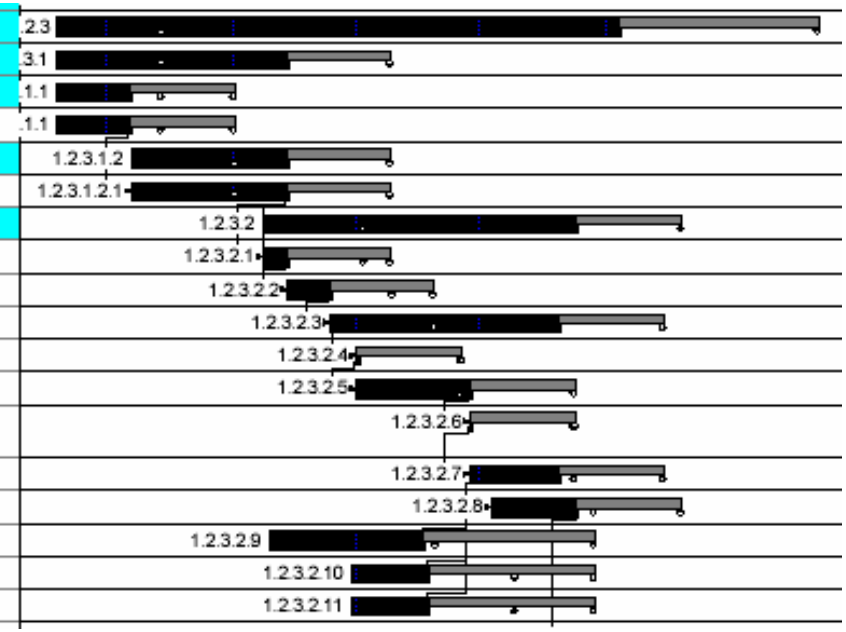

- **Spool assembly:**
  - **design → contractual process → assembly → cold-testing**
  - **Fabrication estimates based on LHC DFBX experience**
    - **DFBX is LHC cryogenic feedbox of similar complexity**

Risk Analysis

- **Risk**
  - Delay in superconducting cable procurement
  - Delay in corrector magnet contract

- **Mitigation**
  - ➔ A Request for Proposals "RFP will be prepared for release in 10/04 so that we will be able to issue a PO by 1/05
  - ➔ An Memorandum of Understanding (MOU) is being written with BNL so that we will be ready to commit funds by 1/05

Responses to CD-1 Review Recommendations

1) Increase AP manpower to work on beam dynamics during preliminary design phase

We concur with this recommendation. An additional accelerator physicist (Tanaji Sen) has been formally assigned to this project. In addition, Meiquin Xiao will continue to provide calculational support for tracking studies.

2) Study failure modes that could damage pixels

We concur with this recommendation. A physicist in the AD Tevatron Department has been formally assigned as liaison to the C0 IR project, and he is leading this study in conjunction with the pixel group and members of the AD Integration Department. A preliminary list of accident scenarios with actual or potential mitigation strategies is published in btev-doc-3430. Calculations are ongoing

3) Determine effect of BTeV pixels on beam dynamics

We concur with this recommendation, but it is properly the responsibility of the pixel group (WBS1.2), which has already done substantial work on this subject.

4) Assess viability of hanging support system well before relase of vacuum vessel RFP in Feb. 05

We concur with this recommendation. A mockup will be constructed within the next few months, and mechanical tests will be performed. A design for a test stand currently exists, and once it is built it will be stationed at the C0 Assembly Hall (or service building) for long term monitoring of motion

Responses to CD-1 Review Recommendations (2)

5) Resolve HTS lead issue before CD-2

We concur with this recommendation. We have verified that the HTS leads currently installed in some H spools in the Tevatron will operate at 10KA. We intend to use these 7 lead pairs and will purchase 6 new ones from vendors. Two potential vendors have been identified.

6) Aggressively pursue choice of vendor for correction coils with emphasis on schedule

We concur with this recommendation. We have visited or communicated with several other laboratories. BNL is the only lab that can easily meet our schedule. We are currently writing an MOU with BNL to supply us with the corrector packages.

7) Review preliminary spool design prior to CD-2 if possible

We concur with this recommendation. We submitted the spool design to 6 different vendors for comments and budgetary cost estimates. These vendors were paid for this service. We received credible responses from 3 of these vendors.

Breakout Talks

More detailed information is available in the breakout sessions.

- Accelerator Physics – John Johnstone
- Quadrupole Cold Mass – Fred Nobrega
- Quadrupole Cryostat – Tom Nicol
- Spools – Tom Page
- HTS Leads – Sandor Feher
- Corrector Magnets – Mike Anerella (BNL)
- Magnet Cost Overview – Deepak Chichili
- 2005 Shutdown – Peter Garbincius
- Power Supplies – George Krafczyk
- Electrostatic Separators – Rodger Bossert
- Cryogenic Elements – Jay Theilacker
- Controls – Sharon Lackey
- 2007 – 2009 Shutdowns – Rob Reilly

Glossary

- **β^*:** beta function at the interaction region; luminosity is inversely proportional to this quantity
- **Spool:** cryogenic element that contains corrector magnets, power leads, safety leads, quench stoppers, relief valves, and other items not contained in main magnets
- **HTS lead:** High Temperature Superconductor power lead; transfers magnet power from external warm bus to superconducting cable within cryostat
- **RFP:** Request for Proposal; this initiates the formal procurement process
- **DFBX:** LHC cryogenic feedbox; used as basis of estimates for spool assembly
- **LCW:** Low Conductivy Water; used to cool magnets, power supplies, and power leads
- **Tevatron locations:** Tevatron is divided into 6 major sectors, A – F; each sector has a long warm straight section, A0 – F0; each sector is divided into 4 cryogenic houses, A1 – A4, …, F1 – F4
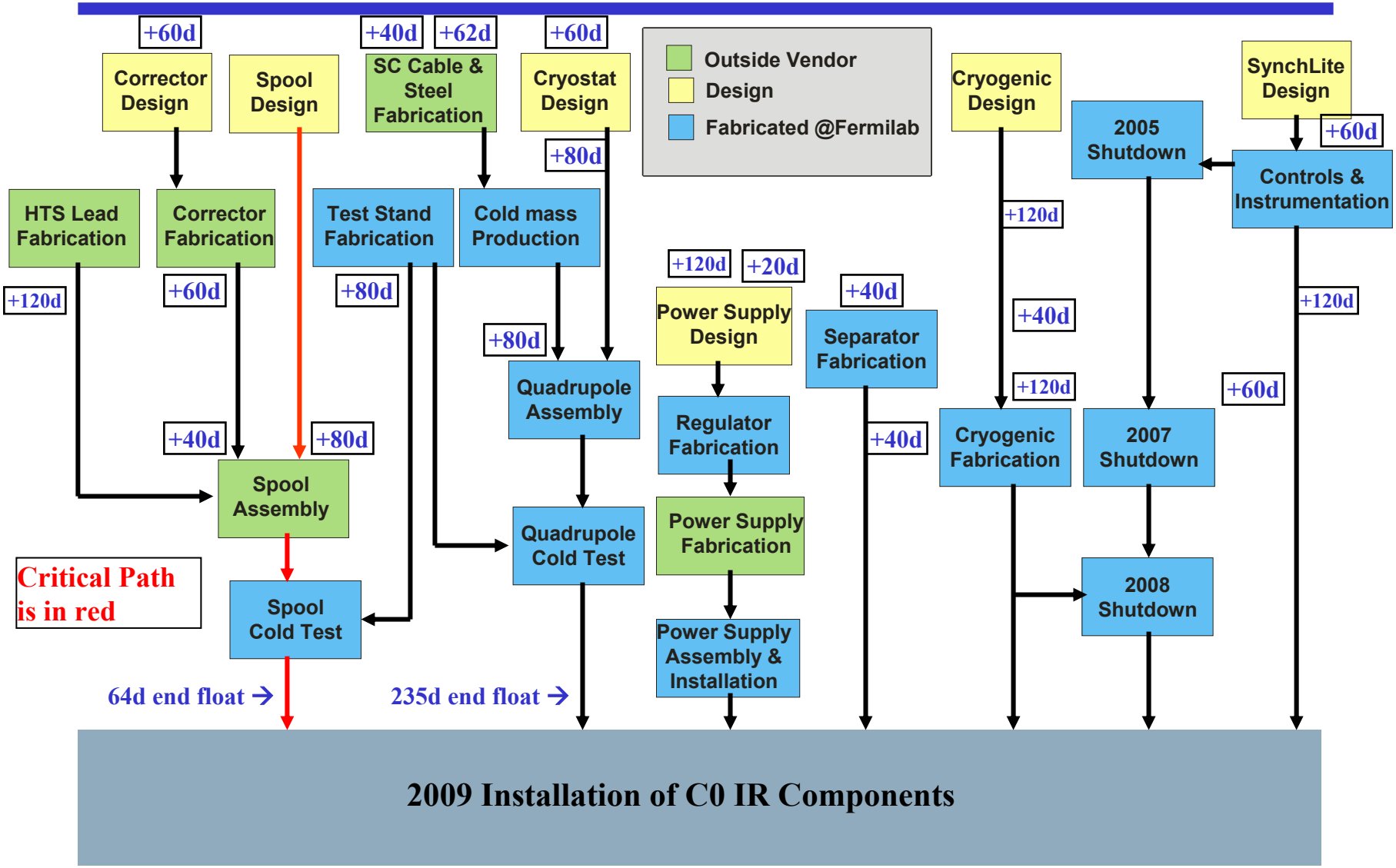
Project Flow with Distributed Float