Magnets & Beam Pipe (WBS 1.1) and Detector Installation, Integration and Commissioning (WBS 1.10)

Chuck Brown (WBS 1.1)

Joe Howell (WBS 1.10)

Overview WBS 1.1 and 1.10

- Introduction and overview of the BTeV magnets and beam pipe and detector installation, integration and commissioning
- WBS 1.1 – Vertex magnet, Toroid Magnets & Beam Pipe
  - Project requirements and descriptions
  - Project organization
  - Costs
  - Schedule
  - Milestones
  - Risk Assessment
  - Response to principal CD-1 recommendations
- WBS 1.10 – Detector Installation, Integration and Commissioning
  - Same as above …
- Presentations prepared for the breakout sessions

Requirements WBS 1.1

- The purpose of the Vertex Magnet is to provide a strong uniform magnetic field in the region of the silicon pixel detector in order to allow the momentum of high-energy particles to be determined at the trigger level and to provide a large integrated magnetic field to provide excellent mass resolution for multi-body decays of B hadrons when the pixel detector and forward tracker are used together to determine track momentum.
- The purpose of the North instrumented Toroid Magnet is to provide a magnetized iron absorber that will absorb all hadrons emitted from the interaction region and hence will identify muons (since a muon is the only charged particle that can penetrate 2 meters of iron) and, by deflecting the muons magnetically, help confirm their momentum for purposes of triggering the data acquisition system.
- The purpose of the South un-instrumented Toroid Magnet is to provide shielding and magnetic symmetry.
- The purpose of the Beam pipe is to provide the high vacuum containment for the accelerator beams through the BTeV apparatus.

Magnets and Beam Pipe Components WBS 1.1

- Vertex Magnet
- Disassemble the SM12 magnet in MEast, modify and reassemble in C0 Assembly Hall, measure magnetic field.
- Muon Toroids
- Recover 30-ton iron pieces from SM12 magnet in MEast, reassemble as 2 Toroid assemblies in C0 Assembly Hall, insert Compensating dipoles in Toroid assemblies, measure magnetic field.
- Beam Pipe
- Modify 2 beryllium beam pipes from CDF, fabricate spun aluminum Pixel Vacuum tank window, assemble into BTeV beam pipe, test (includes conventional BP sections).

Vertex Magnet

WBS 1.1

Requirements:

1.5 Tesla – fabricate new pole pieces
No Collision Hall crane – install rollers

Costs:

605K$ + 155K$ contingency (26%)

Schedule:

Start disassembly Oct05,
Start reassembly May06,
Magnet ready Jul06,
Needed by Feb07

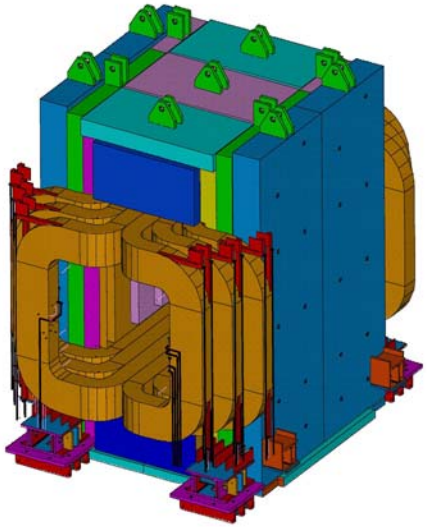

Toroid Magnets WBS 1.1

Requirements:

>1.4 Tesla at all radii
No Collision Hall crane – rollers
Support for Muon Chambers

Costs:

950K$ + 261K$ contingency (27%)

Schedule:

Start SM12 disassembly Mar06,
Start assembly Sep06,
1st Toroid ready Nov06, needed Mar07
2nd Toroid ready Feb07, needed Feb08

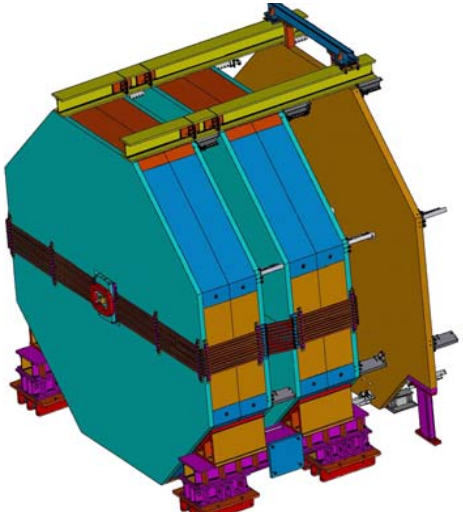

North Toroid Assembly

Beam Pipes

Requirements:

<.02” Aluminum equivalent

Low-mass flanges

End window for Pixel Vacuum tank

(Short conventional section)

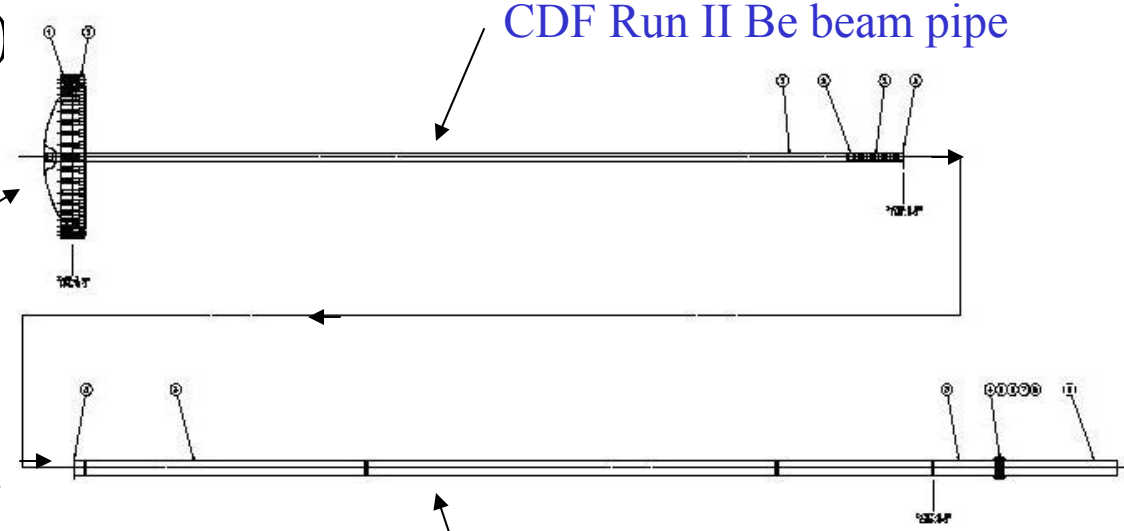

Costs:

399K$ + 76K$ contingency

Schedule:

Start Beryllium BP mods, Nov07

Test completed BP assembly, Aug08

Organization WBS 1.1

Base cost: $2.03M (T+M: $1.47M, Labor: $0.56M)

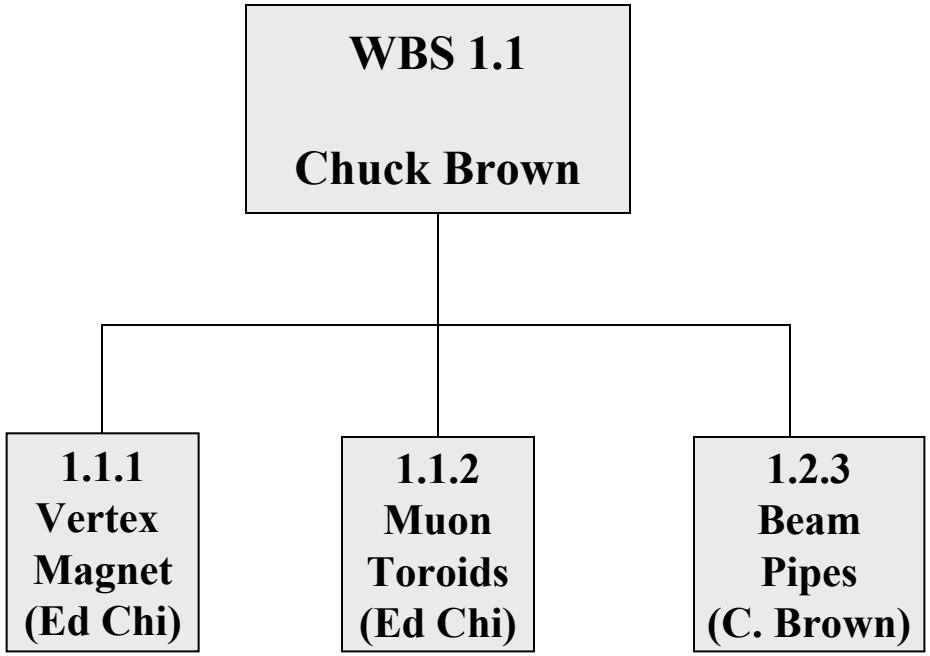

These are fairly conventional tasks at Fermilab

Construction Cost WBS 1.1

Activity ID	Activity Name	Base Cost ($)	Material Contingency (%)	Labor Contingency (%)	Total FY05	Total FY06	Total FY07	Total FY08	Total FY09	Total FY10	Total FY05-10
1.1.1	Vertex Magnet	605,478	26	25	114,930	627,246	18,579	0	0	0	760,755
1.1.2	Muon Toroids	950,207	28	24	0	514,522	696,519	0	0	0	1,211,040
1.1.3	Beam Pipes	399,492	15	25	32,412	2,846	69,669	273,966	96,475	0	475,368
1.1.4	Magnet & Beampipe Software	0	0	0	0	0	0	0	0	0	0
1.1.5	Integration & Testing	6,960	25	0	0	0	0	8,700	0	0	8,700
1.1.6	Vertex/Toroidal Mags and BeamPipe Subproj Man	67,158	25	25	19,155	19,460	19,231	19,231	6,868	0	83,947
1.1	**file_11_092004**	**2,029,294**	**25**	**25**	**166,497**	**1,164,074**	**803,999**	**301,897**	**103,343**	**0**	**2,539,810**

M&S Obligation Profile by Fiscal Year WBS 1.1

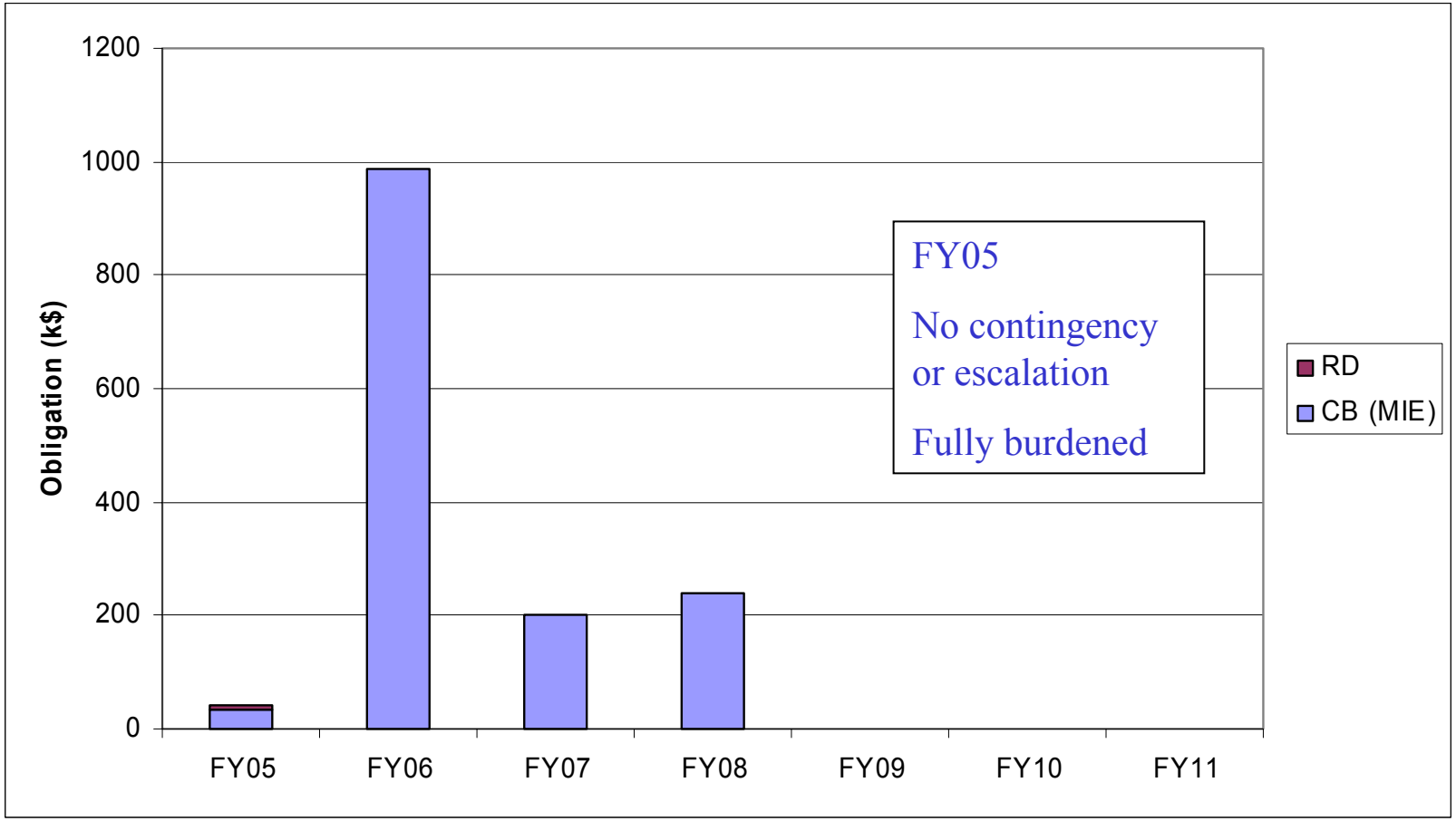

Labor Profile by Fiscal Year WBS 1.1

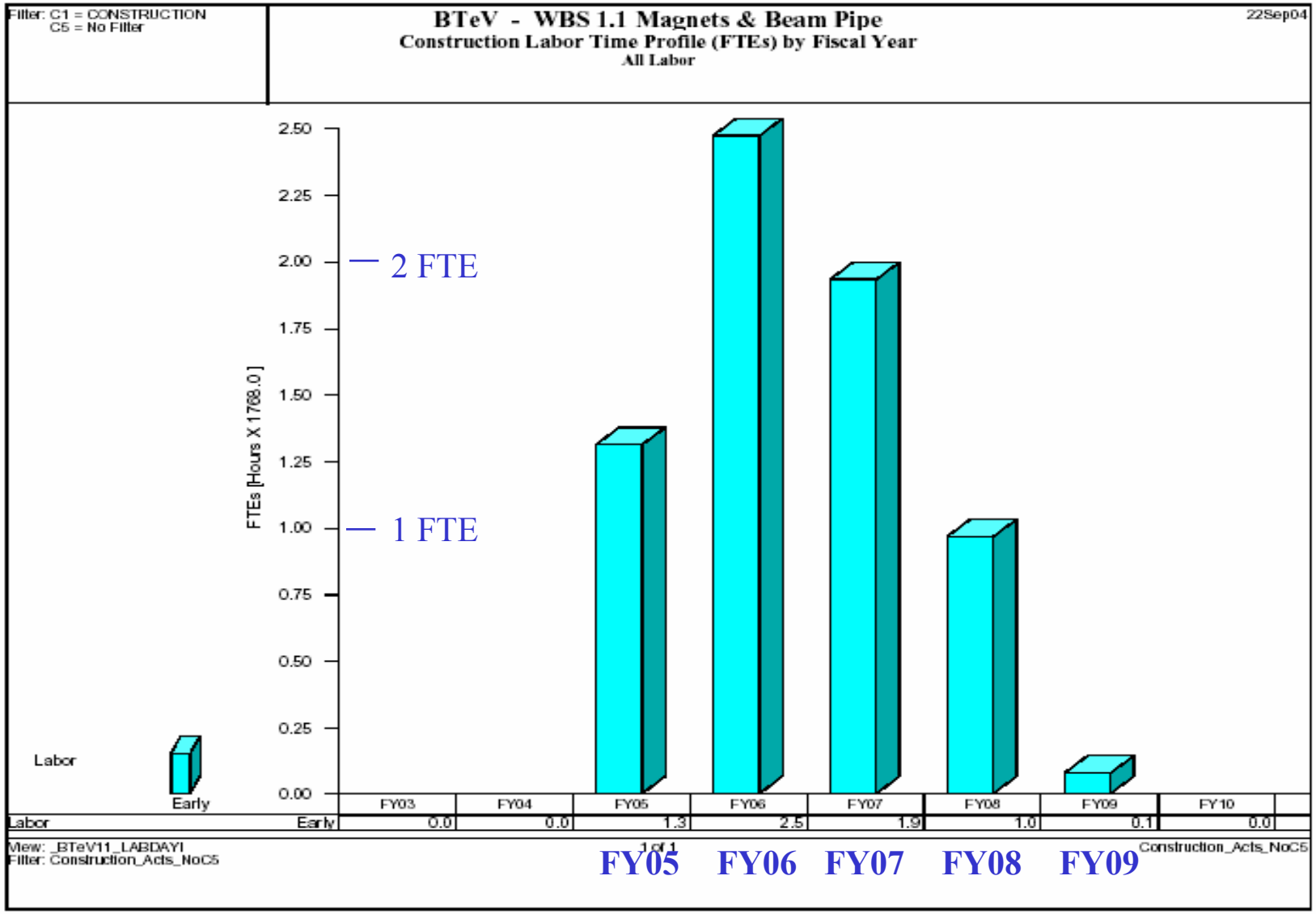

Description of Project Flow WBS 1.1

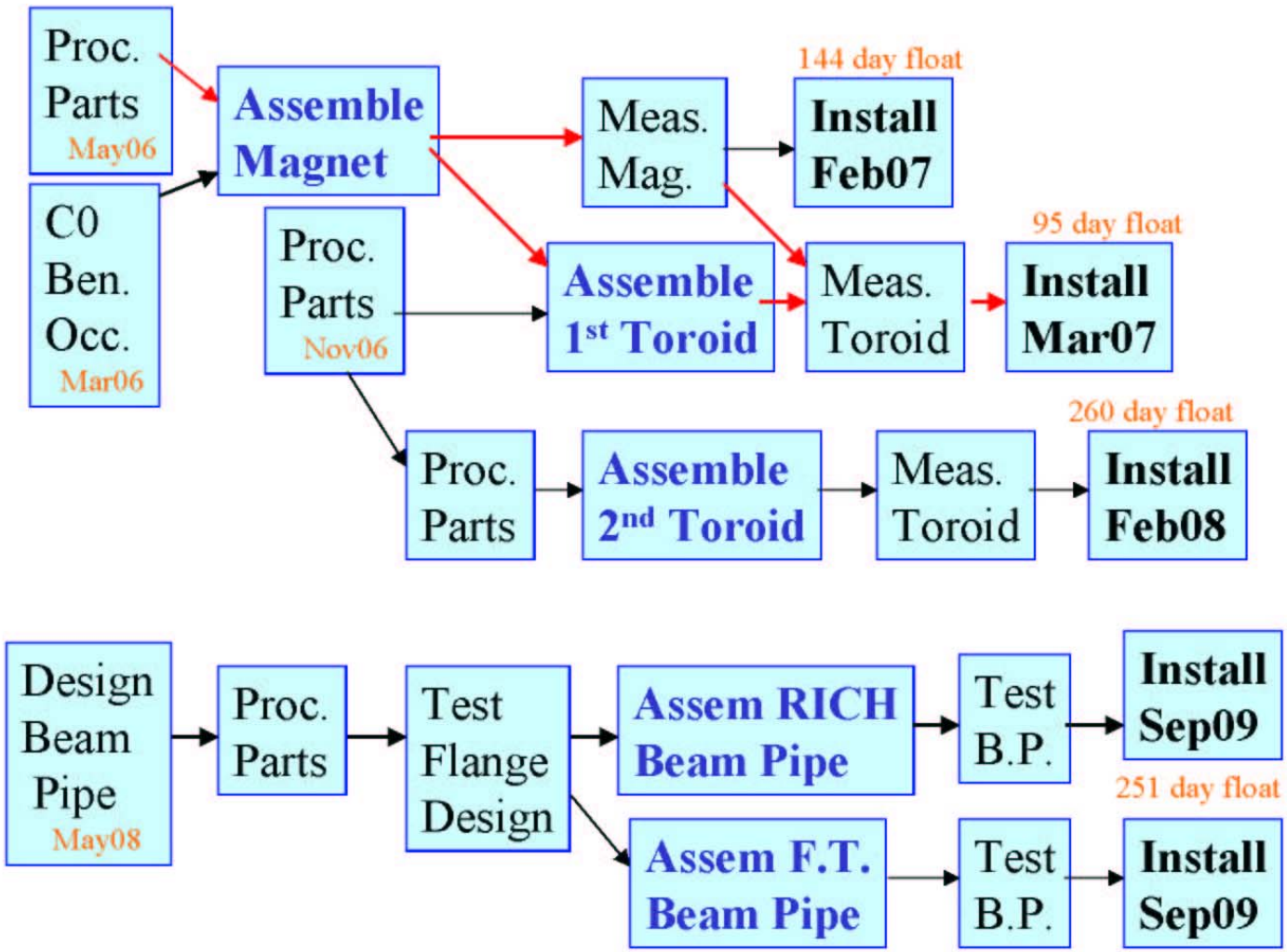

Key Milestones with Distributed Float WBS 1.1

Milestone		Date
Vertex Magnet parts complete		May-06
Vertex magnet ready for installation	(144 days float)	Dec-06
1st Toroid parts acquisition complete		Nov-06
1st toroid ready for installation	(95 days float)	Feb-07
2nd Toroid parts acquisition complete		Feb-07
2nd toroid ready for installation	(260 days float)	Apr-07
Beam pipe design approved		Feb-08
Beam pipe assembly ready for installation	(215 days float)	May-09

Critical Path Analysis with Distributed Float WBS 1.1

- Vertex Magnet Ready (TF = 144 days)
  - The vertex magnet needs to be ready early so the 1st toroid can be assembled.
- 1st Toroid ready (TF = 95 days)
  - the 1st toroid needs to be installed in the Collision Hall to free up assembly hall space for the 2nd toroid and the RICH tank .
- 2nd Toroid ready (TF = 260 days)
  - the heavy rigging part of the 2nd toroid construction should be completed before the RICH tank assembly can begin.
- Beam Pipe Assembly ready (TF = 251 days)
  - The beam pipe installation comes later in the project, has large float, and should not cause schedule problems.

Risk Analysis WBS 1.1

Risk Event	Response/mitigation strategy
Damage to Vertex Magnet Coils	Coils have been successfully repaired in past
Low-mass Beam Pipe Flanges are hard to produce	Heavier flanges can be used until flange development program is successful
Beam pipe vacuum leaks	Plan for beam pipe completion well ahead of installation date.

CD-1 Recommendations WBS 1.1

- There were no CD-1 recommendations for the WBS1.1 subproject.
- Nevertheless, as a result of the general CD-1 recommendation to reevaluate the overall BTeV spectrometer installation schedule, a careful reexamination of the schedule for the installation of the WBS1.1 components has resulted in a much larger float, and a better understood schedule, for WBS1.1.

Detector Installation and Integration

WBS 1.10

Requirements

The following are the high-level requirements for the installation, integration, and commissioning of the BTeV spectrometer that are necessary for BTeV to achieve its physics goals.

The primary goal of the installation coordination is to take maximal advantage of Tevatron down periods throughout the duration of the project in order to install the complete BTeV detector in the C0 collision hall.

The primary goal of the integration task is to minimize the interferences between the various detector components while simultaneously minimizing the amount of material in the aperture of the spectrometer.

The primary goal of the commissioning coordination is to ensure that the spectrometer can be completely commissioned in a minimal amount of time.

Scope WBS 1.10

- Installation and integration planning
  - Overall drawings, numbering systems, cable and rack plans
  - Procedures, operations documents and ES&H guidance
- Infrastructure and common procurement
  - Design, parts acquisition and installation of common use infrastructure
    - Electronics cooling water, gas sources, racks
  - Procurement coordination of HV & LV power supplies and cables
- Detector Transportation, Assembly and Installation
  - Placing detector and installing support systems
  - Cable and rack installation
  - Survey and alignment
- Stand-alone and Multi-system interconnections and testing
  - Complete connections and test systems
  - Interconnect detectors, DAQ and Trigger and test
- Coordination with WBS 2.0 and WBS 3.0

C0 Building WBS 1.10

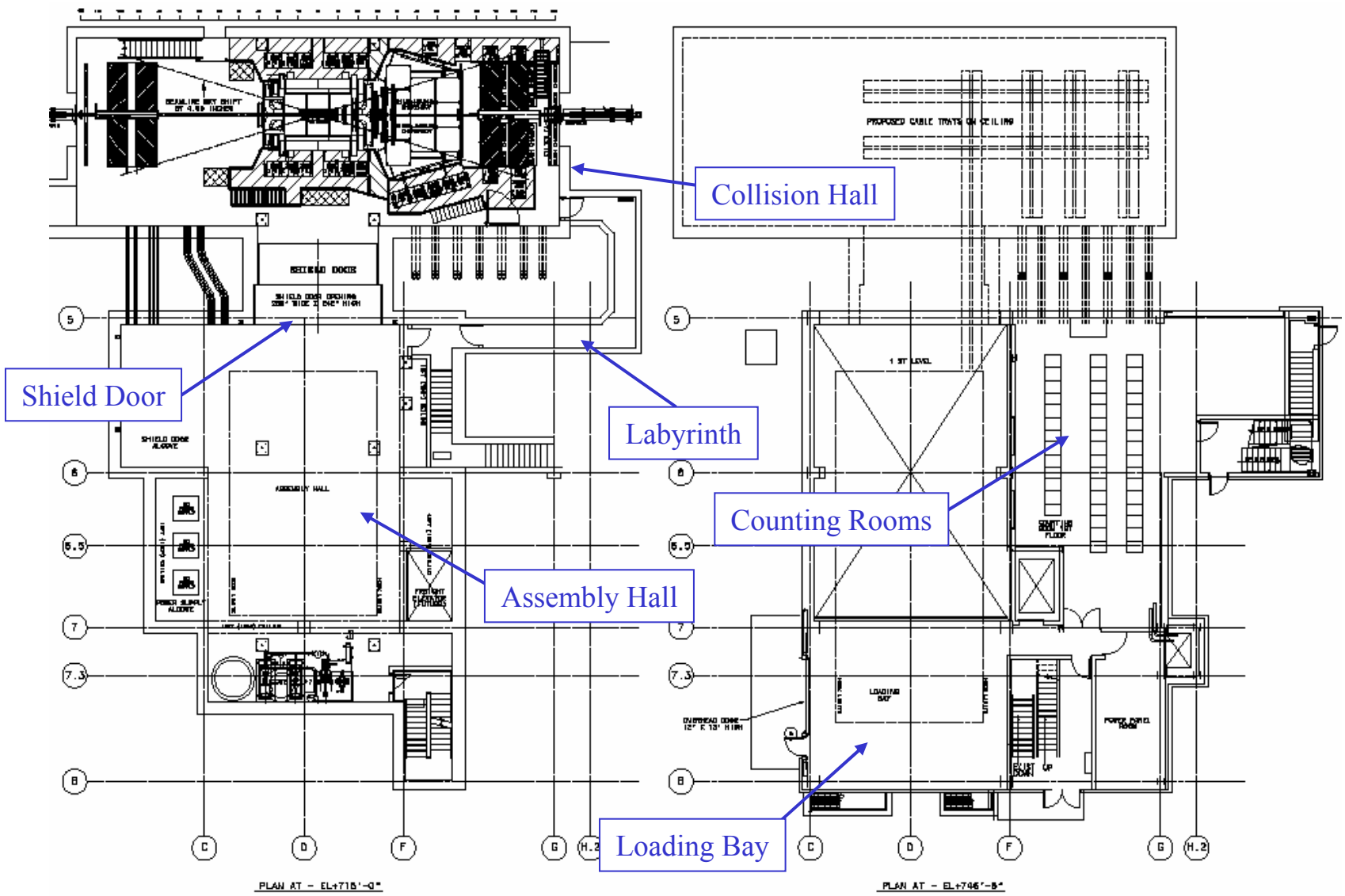

Vertex and Toroid Magnets Installation WBS 1.10

- Characteristics
  - Massive (~400 Tons each)
  - Only 2 fit in the assembly hall at one time
  - The foundation for other detectors
- Schedule Notes
  - Need access to C0 building for assembly
  - Need LCW and power for testing
    - LCW from WBS 2.0
    - Power from C0 outfitting Phase 1
  - South Toroid and Vertex Magnet need to be installed by March 2007
  - North Toroid needs to be installed by March 2008

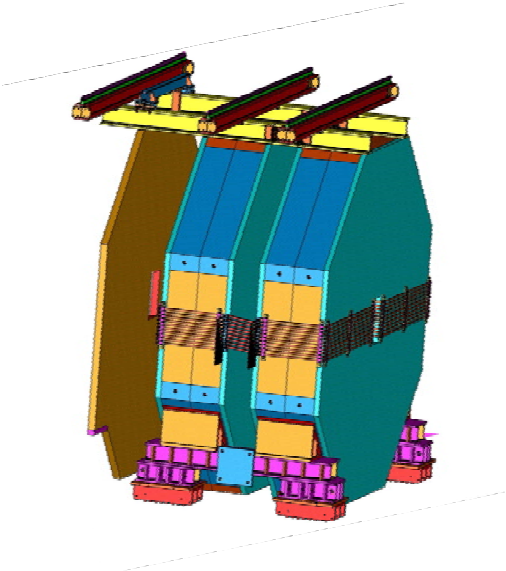

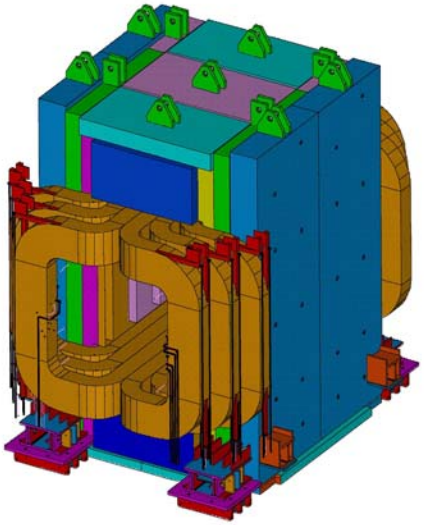

EMCAL and Muon Detector Installation WBS 1.10

- Characteristics
  - Muon 24 Muon Wheels
  - EMCAL ~ 10K Crystals
  - Generally independent of other detectors
- ECAL Schedule Notes
  - Support structure assembled in collision hall along with RICH after 2nd Toroid is installed
  - 50% or more filled support structure installed in 2009 shutdown
  - Balance of crystals installed in 2010 shutdown
- Muon Schedule Notes
  - Mounted to Toroid Magnet in collision hall
  - Each wheel is installed as "knitted" plate segments
  - First two stations installed in 2009 Shutdown
  - Third station installed in 2010 Shutdown

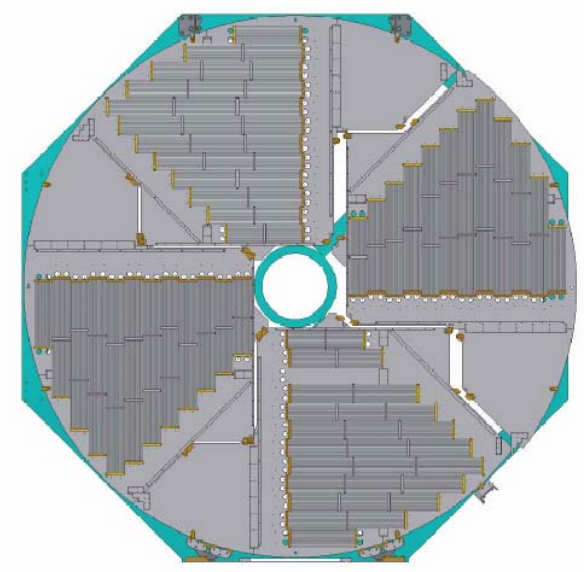

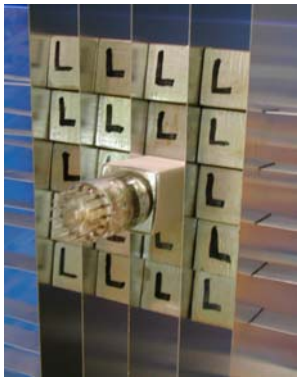

RICH Installation WBS 1.10

- Characteristics
  - Large (does not fit past Vertex Magnet with MAPMT array's in place)
  - Many features (Mirrors, liquid radiator, MAPMT's, PMT's)
  - Be beam tube section passes through RICH
- Schedule Notes
  - RICH Tank assembly must take place in C0 Assembly hall
  - RICH Tank with mirrors and top PMT is installed in 2008 shutdown
  - MAPMT's are installed in 2009
  - Remaining three PMT's are installed in 2010 Shutdown

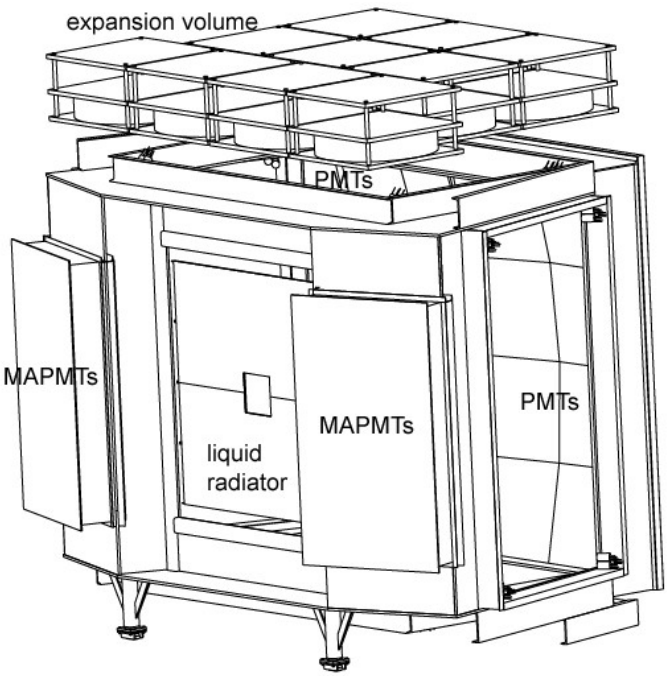

Pixel and Forward Tracking Installation WBS 1.10

- Characteristics
  - Light to moderate weight (few to 1000 kg)
  - Delicate
  - Straws and Strips split to fit around beam pipe
- Schedule Notes
  - Pixel detector installed in 2009 Shutdown
  - 5 straw stations and 4 strips stations installed in 2009 shutdown
  - Remaining 2 straw stations and 3 strip stations installed in 2010 shutdown

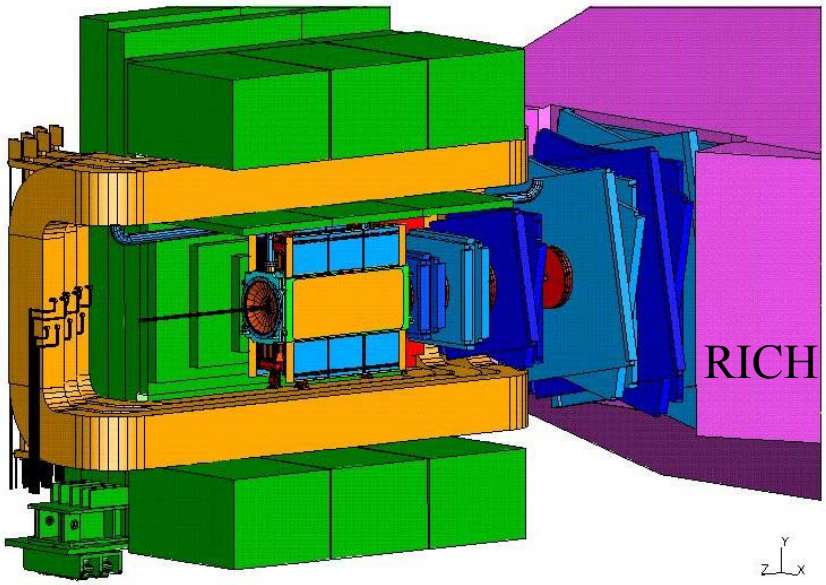

Half of vertex magnet removed

Installation Order WBS 1.10

- Installation order(pre-2009):
  - South (un-instrumented) toroid
  - Vertex magnet
  - North toroid
  - RICH detector tank
- 2009 order;
  - ECAL structure
  - North RICH MAPMT
  - Pixel tank
  - Forward tracking beam pipe
  - Forward tracking stations 1,2,5,6,7
  - South RICH MAPMT
- (quasi) independently
  - Muon stations 2,3
  - Trigger and DAQ

Have installation plans for all subprojects consisting of activity descriptions with time estimates for resources and task durations.

Example:

5k crystals to install in 12 week shutdown. Can install 600/per week in single shift, 2 crews. Could install 7k crystals in 12 week shutdown – 40% contingency

Installation Order WBS 1.10

- 2010 shutdown installation
  - Remaining two straw stations
  - 3 strip stations will be installed to complete the forward tracking.
  - Muon station 1
  - Last three RICH PMT arrays
  - 2nd 50% of crystals loaded into EMCAL structure.
  - 2nd half of Trigger and DAQ will be installed
- Have retained 2-4 weeks contingency at the end of each scheduled shutdown activity through 2010

Notes on Staged Installation WBS 1.10

- Vertex and Toroid Magnet installations are not tied to specific shutdowns
- 50% of EMCAL crystals installed in assembly hall
- Trigger and DAQ equipment installed in the Counting Room can be installed between two long shutdowns
- Major installations tasks are spread over two extended shutdowns (17 weeks and 13 weeks) which are dedicated to BTeV
- Staging limits schedule risk in first installation period
- Installation plans based on single shift 5-day/week operation
  - OT + Saturdays provide first line of schedule contingency
  - Go to double shifts if needed

WBS Organization WBS 1.10

Base cost: $7.93M (M&S: $2.21M, Labor: $5.72M)

1.10.1 System Installation, Integration, Testing and Commissioning Planning

1.10.2 Infrastructure Development and/or Procurement, Installation and Testing at C0

1.10.3 Component and System Transportation to and Assembly, Installation and Infrastructure Connections at C0

1.10.4 Multiple Subsystem Interconnections and Integration and Testing

Time

1.10.5 System Integration and Testing

1.10.6 System Installation, Integration and Commissioning Subproject Management

FY2005	FY2006	FY2007	FY2008	FY2009	FY2010

Functional Organization WBS 1.10

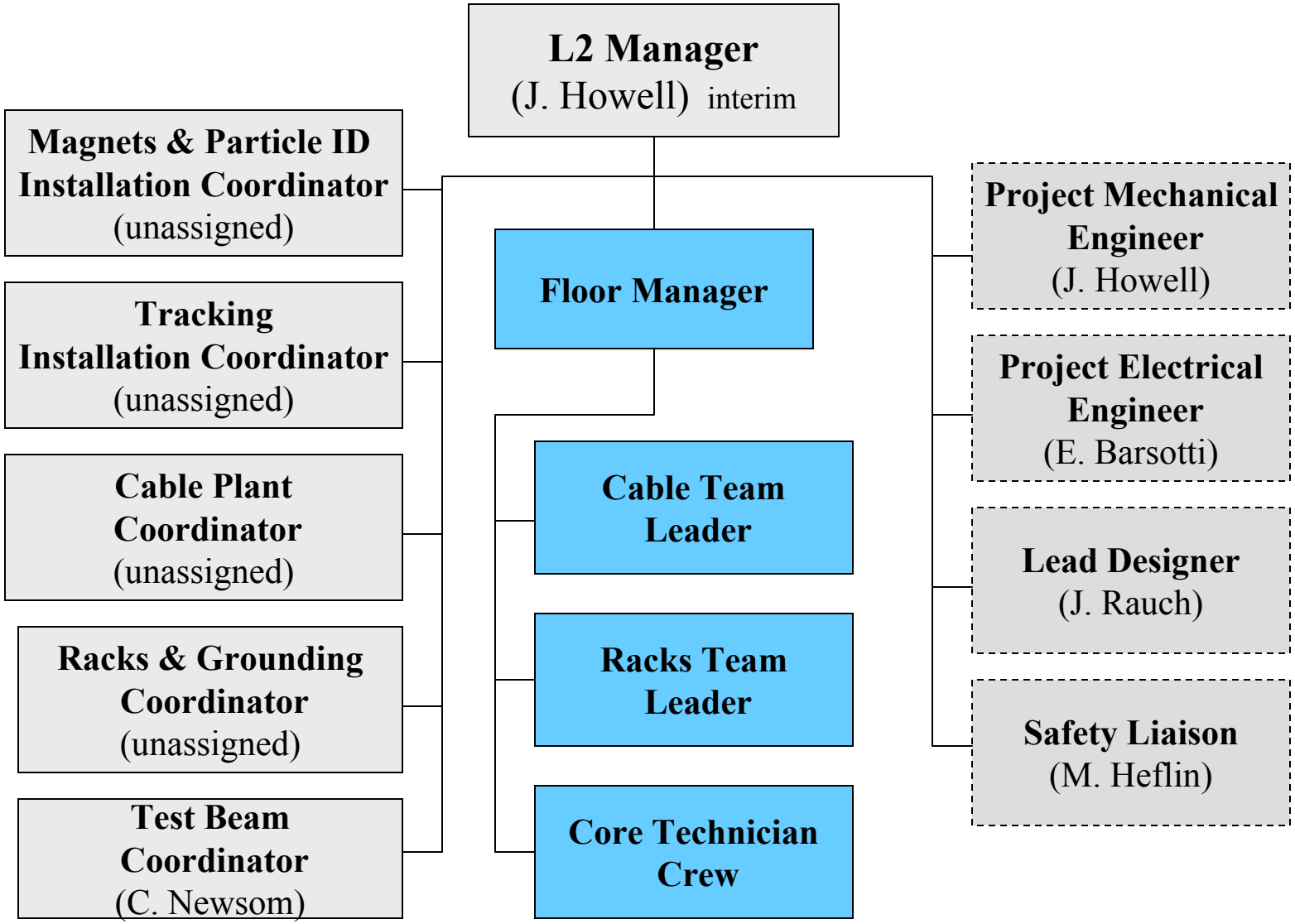

Construction Cost WBS 1.10

Activity ID	Activity Name	Base Cost($)	Material Contingency (%)	Labor Contingency (%)	Total FY05	Total FY06	Total FY07	Total FY08	Total FY09	Total FY10	Total FY05-10
1.10.1	Installation Integration Testing and Commission Planning	1,063,996	0	35	426,186	572,213	342,963	96,531	0	0	1,437,893
1.10.2	Infrastructure Development Procurement InstallTest at C0	3,134,511	24	35	150,471	650,213	1,397,041	1,621,741	194,280	1,877	4,015,622
1.10.3	Component and Syst Transport Assembly Install and Connect	2,632,520	29	85	0	0	160,269	274,895	2,413,890	1,905,375	4,754,429
1.10.4	Multiple Subsys Interconnect and Int Testing at C0	615,641	0	134	0	0	0	0	0	1,402,301	1,402,301
1.10.5	System Integration and Testing	23,200	0	0	0	0	0	0	0	23,200	23,200
1.10.6	System Install Integrate Commission Subproject Management	455,226	0	20	90,287	91,726	132,821	88,634	77,661	55,384	536,512
1.1	file_110S_092204	7,925,095	23	65	666,943	1,314,152	2,033,094	2,081,802	2,685,831	3,388,136	12,169,958

CD-1 review: Base $ 6.87M Total: $10.28M

CD-1 Review recommendation: increase contingency to 75%

New Base $7.93M New Total: $12.17M

M&S Obligation Profile by Fiscal Year WBS 1.10

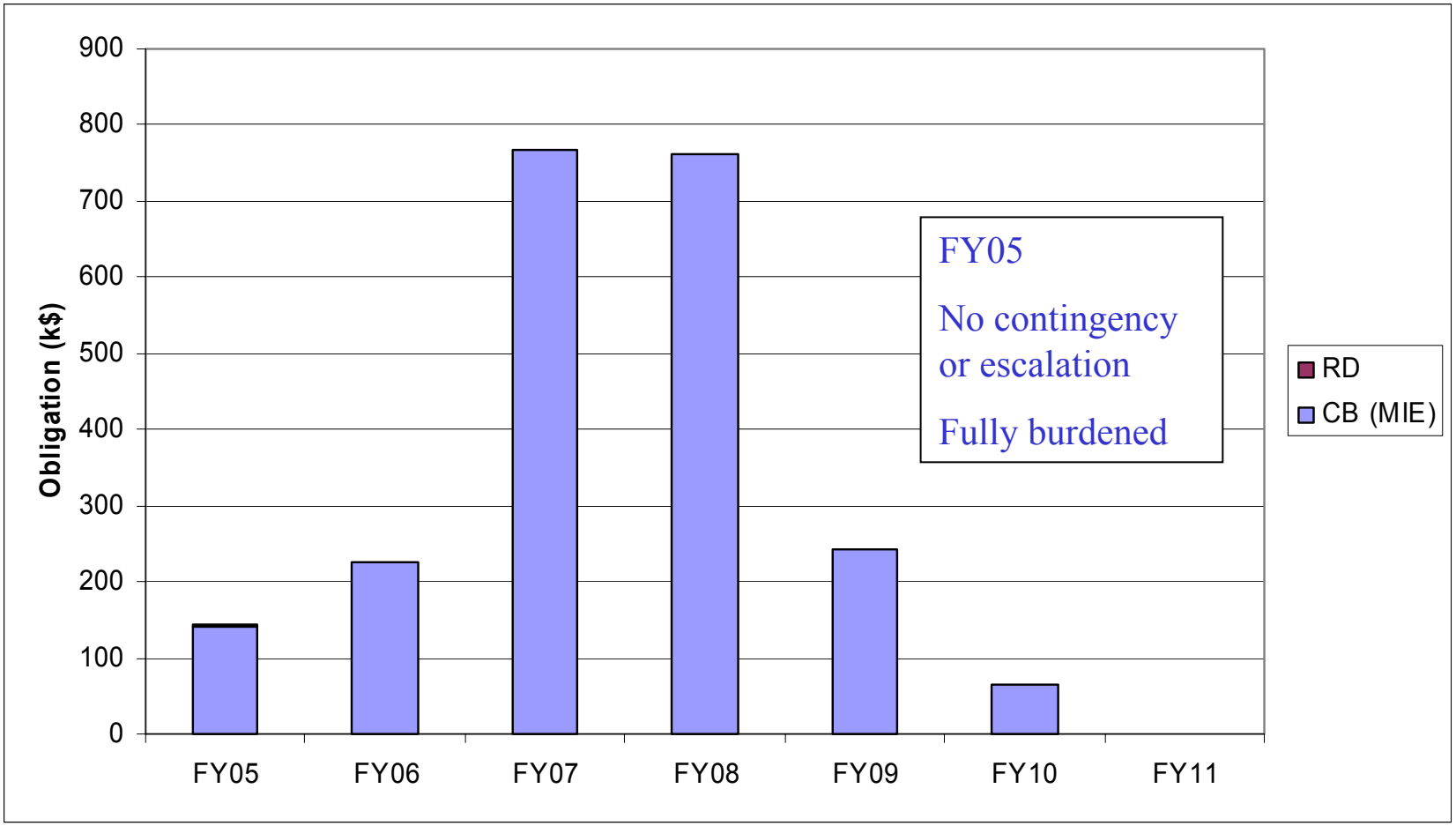

Labor Profile by Fiscal Year WBS 1.10

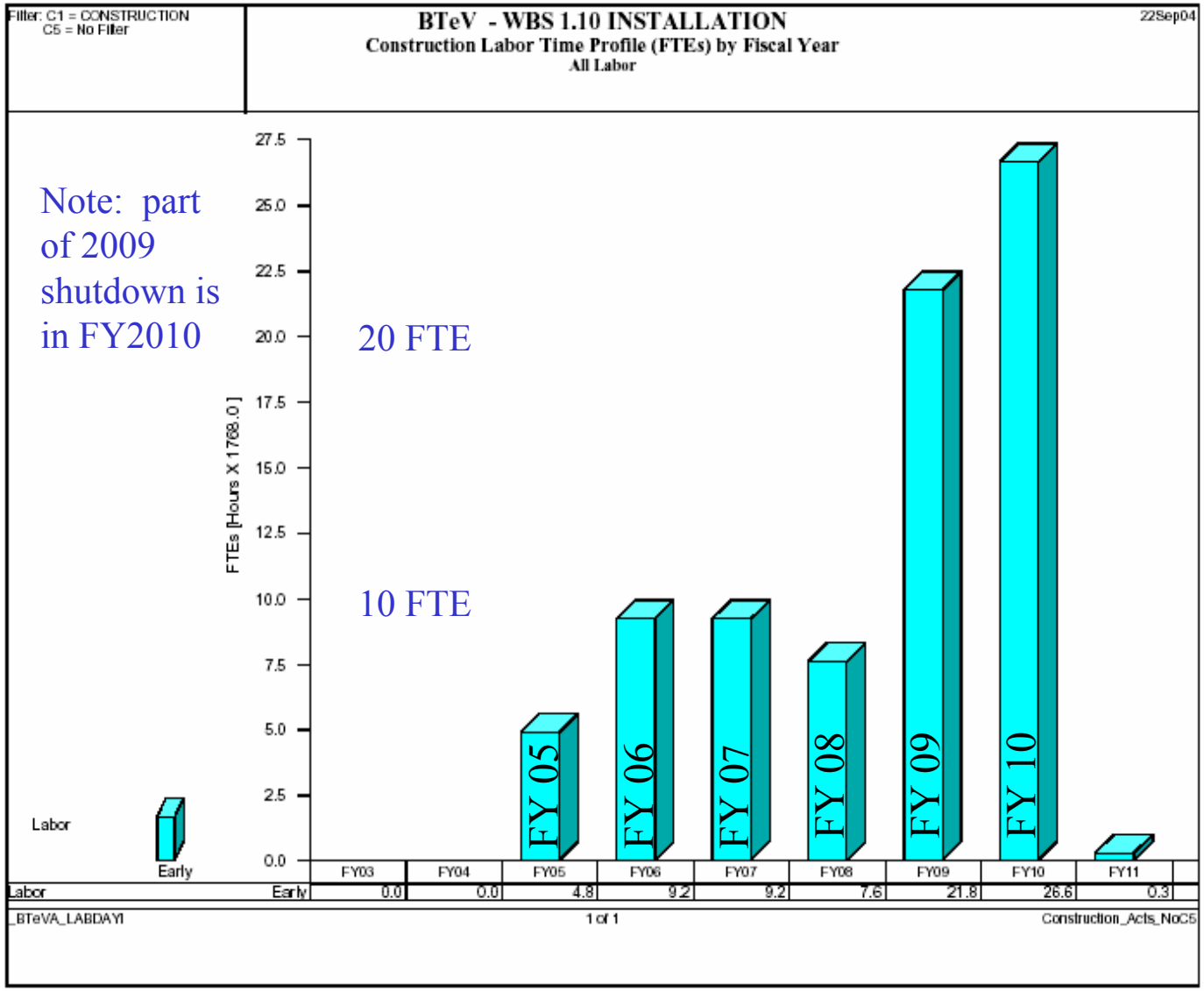

Description of Project Flow WBS 1.10

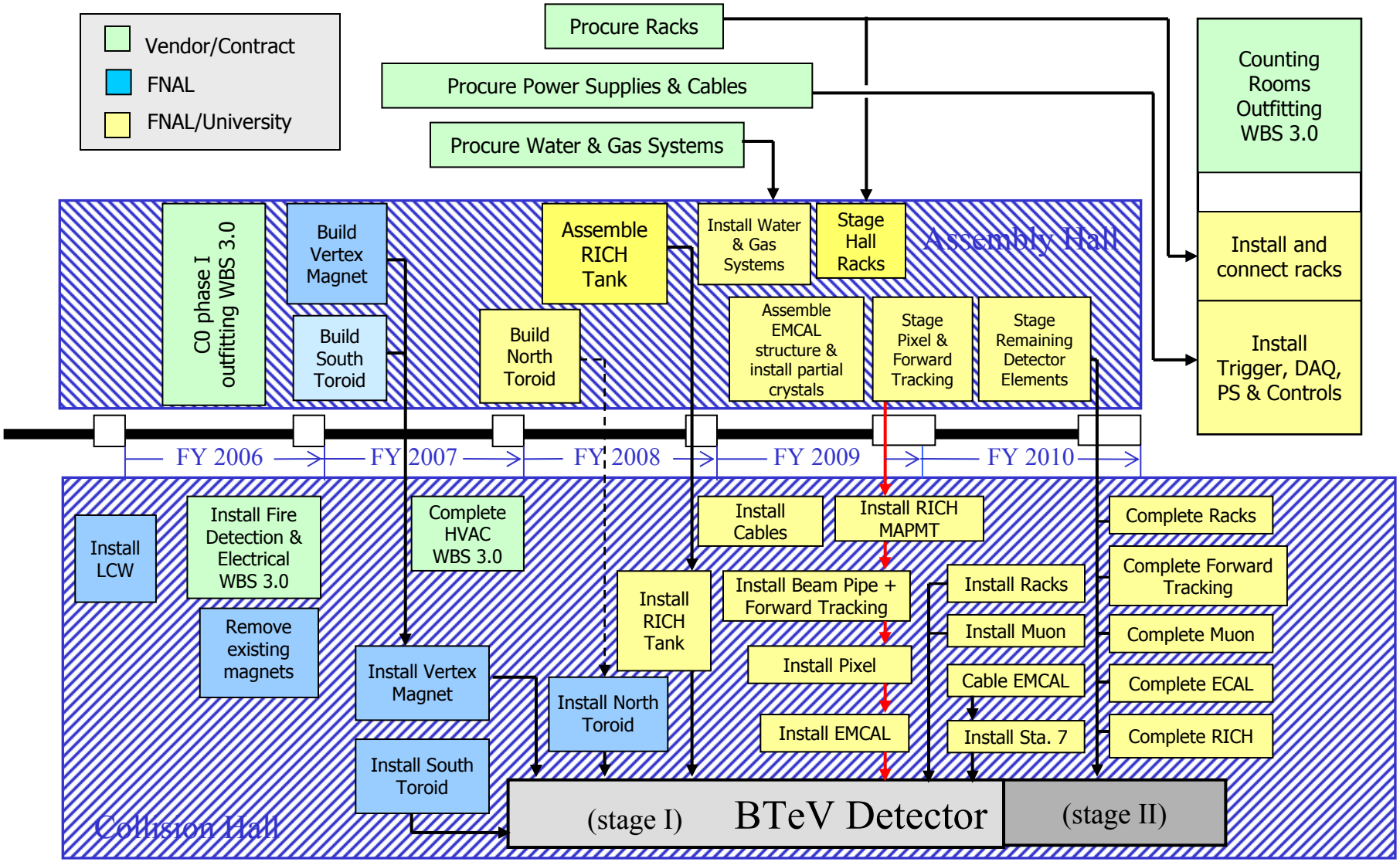

Key Milestones with Distributed Float WBS 1.10

Milestone	Date
T3M-69: PO awarded: Prod of HV Power supplies	April-08
T3M-70: HV Power Supply delivery completed	July-09
T3M-71: Vertex magnet, South toroid installed	March-07
T3M-72: North toroid installed	March-08
T3M-73: RICH tank installed	Sept-08
T3M-74: EMCAL support structure installed	Sept-09
T3M-75: Trigger, DAQ system installed	Sept-10
T3M-76: All other detector subsystems installed	Sept-10

Note: The installation schedule is driven by the sub-detector need-by dates (not the ready-by date)

Critical Path Analysis WBS 1.10

- Stage I Installation
  - Two zones of major work
    - Pixel - Forward Tracking - RICH MAPMT
    - Straw station 7 - EMCAL cabling – Muon Stations
  - Longest Duration Activities
    - Pixel Connections (4 weeks)
    - Straw and Strip Installation (4 weeks)
  - 2009 Shutdown float: 4 weeks on 17 week shutdown (23%)
- Stage II Installation
  - Longest Duration Activity (by far)
    - Crystal installation and cabling (10 weeks)
  - 2010 Shutdown float: 2 weeks on 13 week shutdown (15%)

Risk Analysis

Risks	Response/mitigation strategy
A particular detector is late	The early large detectors have flexible schedules and workarounds can be developed for some schedule slips.
Grounding scheme may not work as anticipated	As each electronic system is commissioned, its noise level will be carefully checked against system requirements. If any system has excess noise, all further installation will stop until the noise source has been identified and a mitigation plan has been formulated. Use the early installation stages to study potential noise issues.
Shutdown schedule changes	The early large detectors can be installed in the collision hall in shorter shutdowns. Even if they are not fully connected the essential function of clearing the assembly hall for following detectors can be met. The installation plan can take advantage of shorter shutdowns to recover from shutdown slips or install detectors early.
The installation of a particular detector takes longer than anticipated	The installation plans are based on 5 day/week single shift of technical personnel. Additional manpower from overtime and additional shifts can be applied to maintain the schedule

CD-1 Recommendations WBS 1.10

- Develop schedule with adequate contingency using bottom-up information
  - The schedule uses labor and duration information provided by the sub-systems
  - The sub-systems have also re-evaluated their installation tasks and procedures. Some changes include:
    - Eliminating un-necessary survey
    - Increasing the number of installation fixtures to speed installation
- Using engineering design to decrease the installation duration
  - This is an ongoing process that includes:
    - Developing the cable and utility routing details so that that field fitting is minimized.
    - Evaluating detector design features that can speed installation and servicing.
    - Developing comprehensive CAD models of adjacent detectors to check for spatial conflicts.
- Appoint level 2 physicist for installation and integration
  - BTeV Project Management is actively seeking such a person.
- Increase installation contingency to 75%
  - The contingency is now 65% but the base costs were increased $1.06M because of additional labor applied before and during the second extended shutdown.

Summary WBS 1.1 and 1.10

WBS 1.1

- Vertex and Toroid magnets are conventional and their costs are well understood
- RICH Beam pipe and Forward Tracking Beam Pipe are needed in 2009
- Base $2.03M and 25 % contingency for $2.54M total

WBS 1.10

- Extensive coordination has taken place between Detector Installation, Building Outfitting and C0 IR on Schedule and Infrastructure
- Detector installation steps and schedule have been established
- Staged installation minimizes schedule risk
- Base $7.93M and 53 % contingency for $12.17M total

Additional information will be available in the breakout sessions

WBS 1.1

- Overview – Chuck Brown

WBS 1.10

- Overview – Joe Howell
- Racks and grounding – John Anderson
- Cable plant – Linda Bagby

The End