BTeV Muon (WBS 1.5)

Will Johns ~ Vanderbilt University

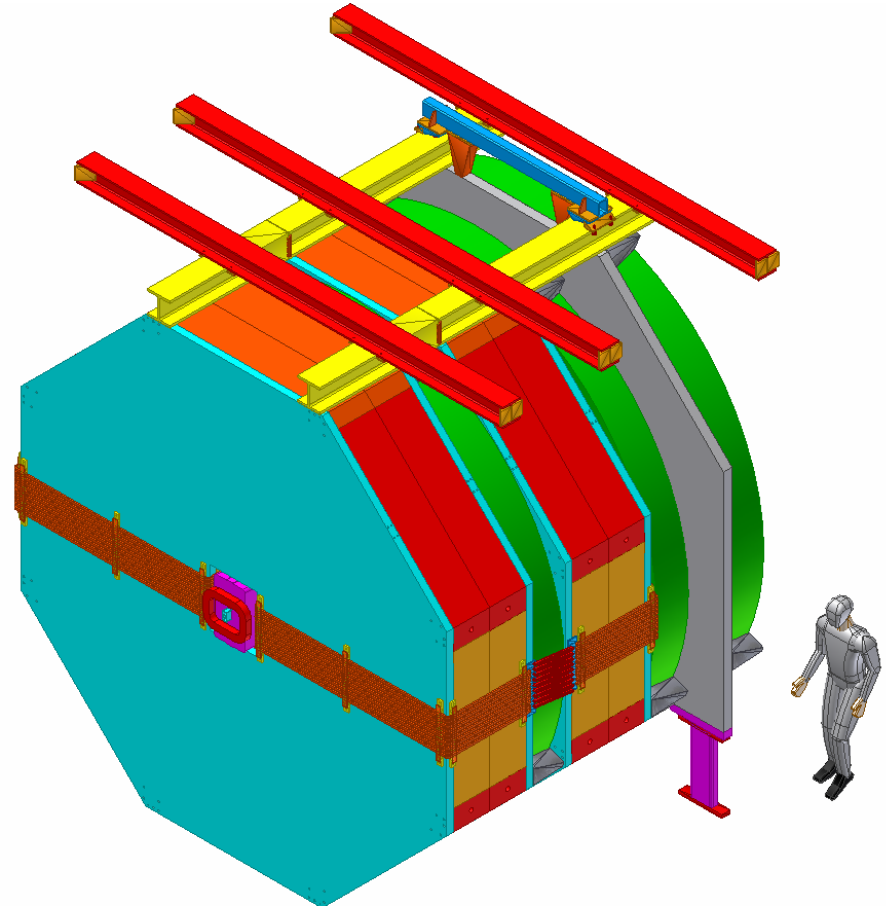

Institutions & People

- **Illinois**
  - Mats Selen
  - Jim Wiss
  - Doris Kim
  - Mike Haney
  - Vaidas Simaitas
- **Puerto Rico**
  - Angel Lopez
  - Hector Mendez
  - Eduardo Ramirez
  - Zhong Chao Li
  - Aldo Acosta
- **Vanderbilt**
  - Will Johns
  - Paul Sheldon
  - Med Webster
  - Eric Vaandering
  - John Fellenstein

Legend:
Engineer
Faculty
PostDoc
Technical

Goals & Constraints

- Provides Muon ID and Trigger
  - Trigger & ID for interesting physics states
  - Check/debug pixel trigger
- Fine-Grained tracking + toroids
  - Stand-alone mom./mass trig.
  - Momentum "confirmation" (improves background rej.)
  - Sets reqd. tracking resolution
- Other design goals/constraints:
  - Min. pattern recognition confusion
  - Minimize occupancy
  - Distribute occupancy uniformly
  - Minimize max. drift time
  - Robust, high-rate detector element
  - Size of hall limits wide-angle acceptance to 200 mrads

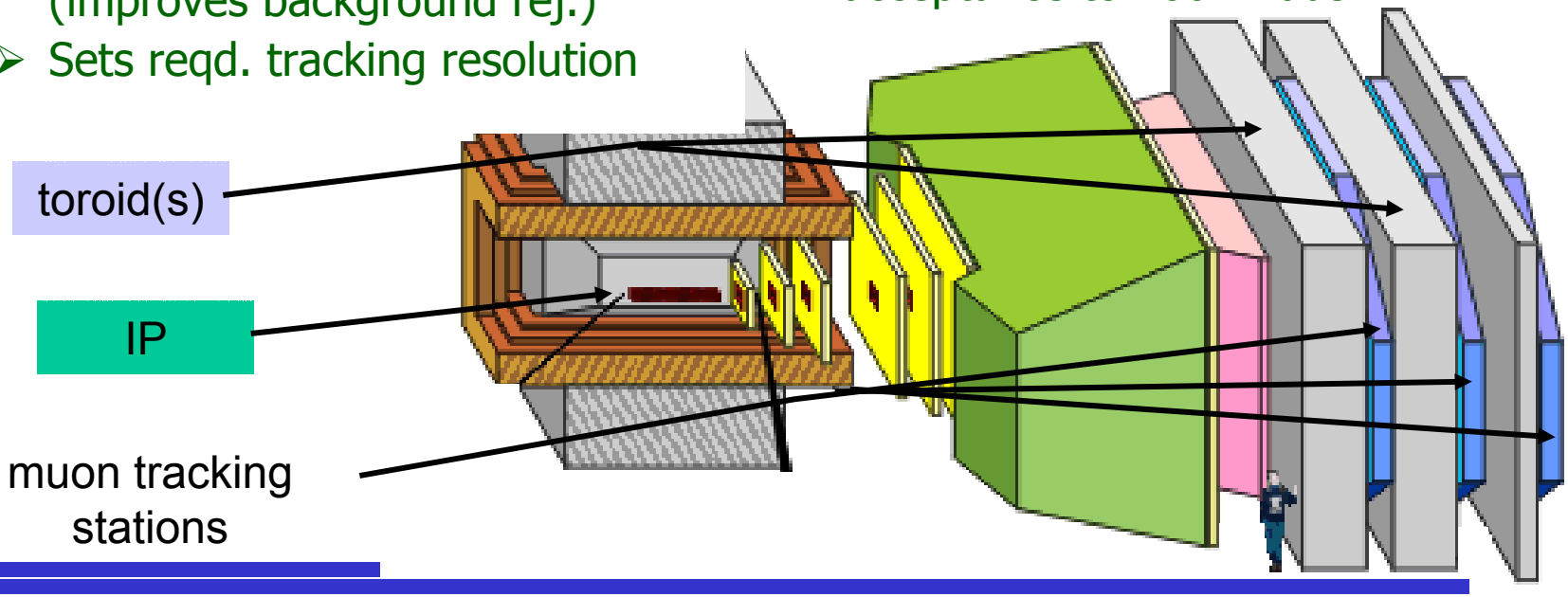

Basic Building Block

- Basic Building Block: Proportional Tube "Planks"
  - 3/8" diameter Stainless steel tubes (0.01" walls)
  - "picket fence" design
  - 30μ (diameter) gold-plated tungsten wire
  - Brass gas manifolds at each end (RF shielding important!)
  - Front-end electronics: use Penn ASDQ chips, modified CDF COT card
  - Likely to use 85% Ar - 15% CO_2 (no CF_4... more on this later)

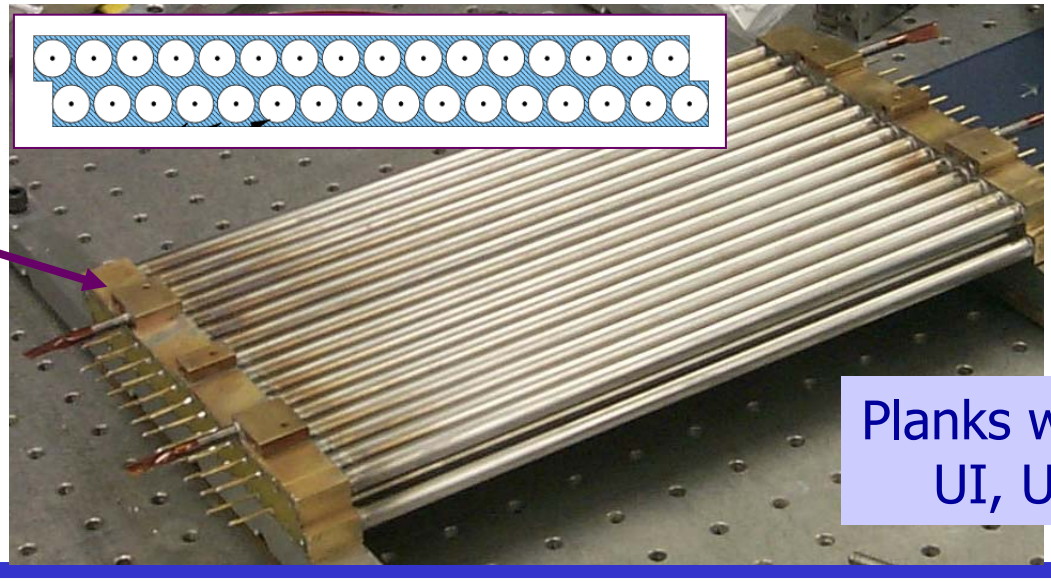

Planks will be built at UI, UPR, & Vand.

Geometry

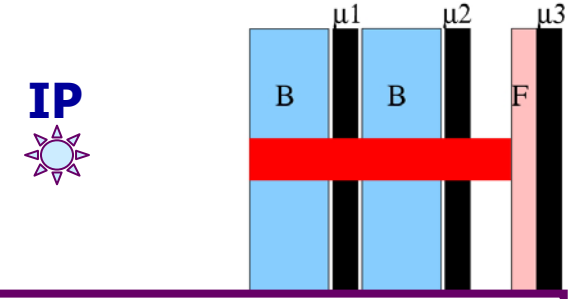

- Meets design goals/constraints:
  - Min. pattern recognition confusion
  - Reduce occupancy
  - Distribute occupancy uniformly
  - Minimize max. drift time
  - Robust, high-rate detector element
  - Stand-alone momentum/mass trigger
  - Momentum "confirmation" (improves background rejection)
  - Meets reqd. tracking resolution (<2mm)

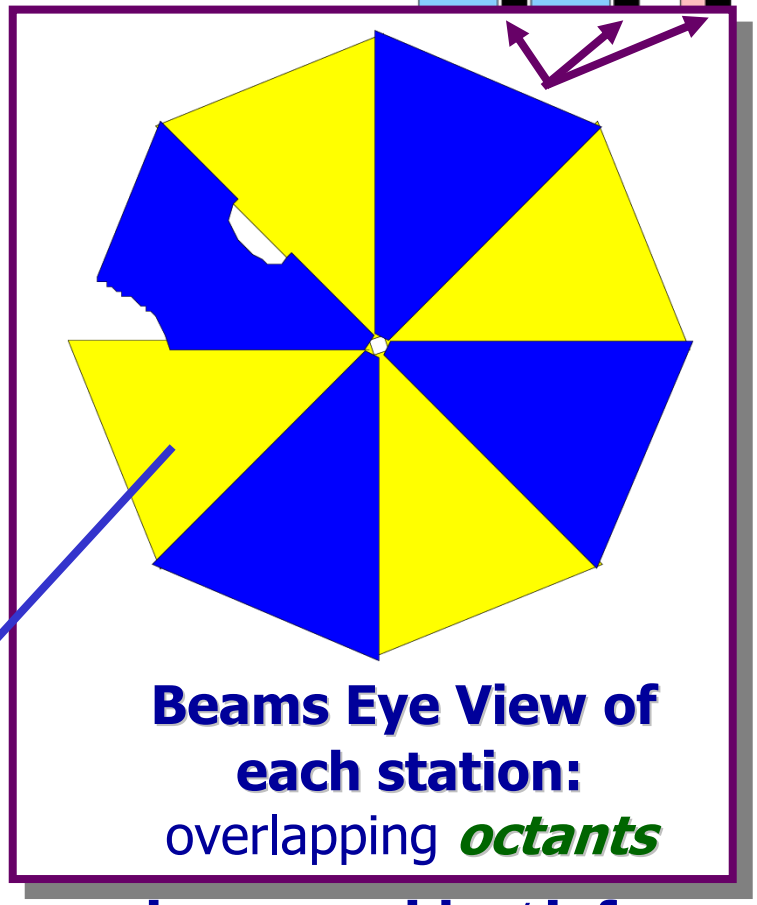

12 planks "cover" each octant

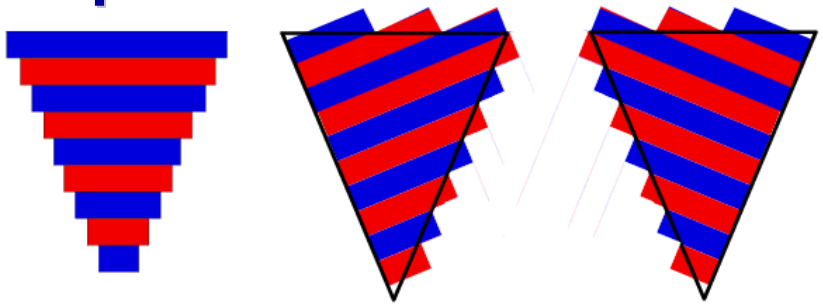

stereo views provide ϕ info.

4 views per station (r, u, v, r)

Installation Unit: Octant (or Quad)

- 4 ***octants*** make a wheel, two wheels construct a view.
- Octants will be built at institutions and delivered to FNAL.
- "Vertical Lazy Susan" installation - rotate during installation on floor rollers
- Each wheel will then be hung vertically from overhead beams.
- This allows each view to be individually serviced: it will be possible to install and/or remove an octant during run.
- Each octant is installed in wide aisle horizontally.

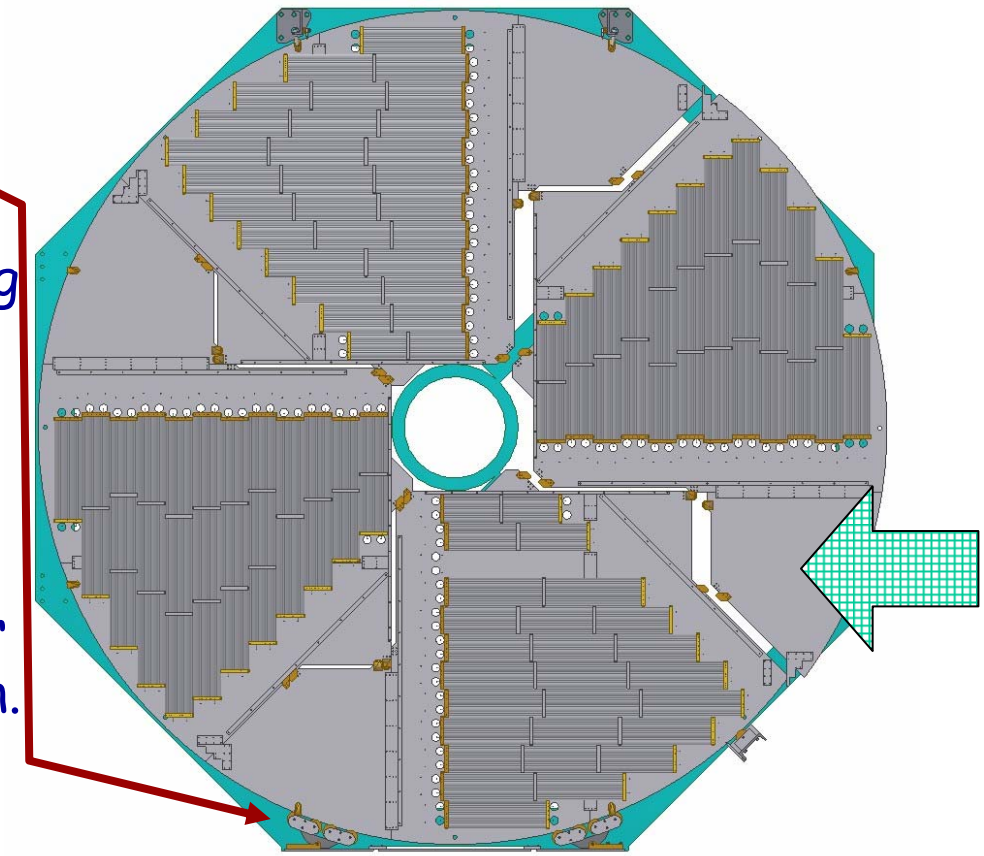

U - stereo wheel plates.

Prototype Wheel and Quad

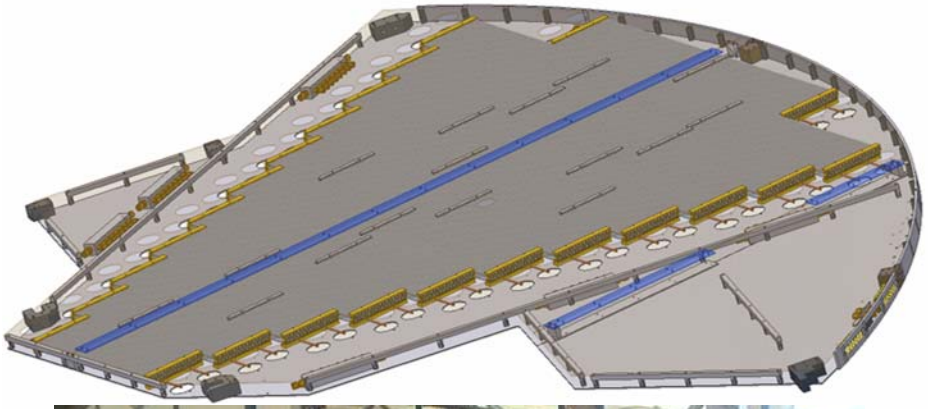

Overhead Support

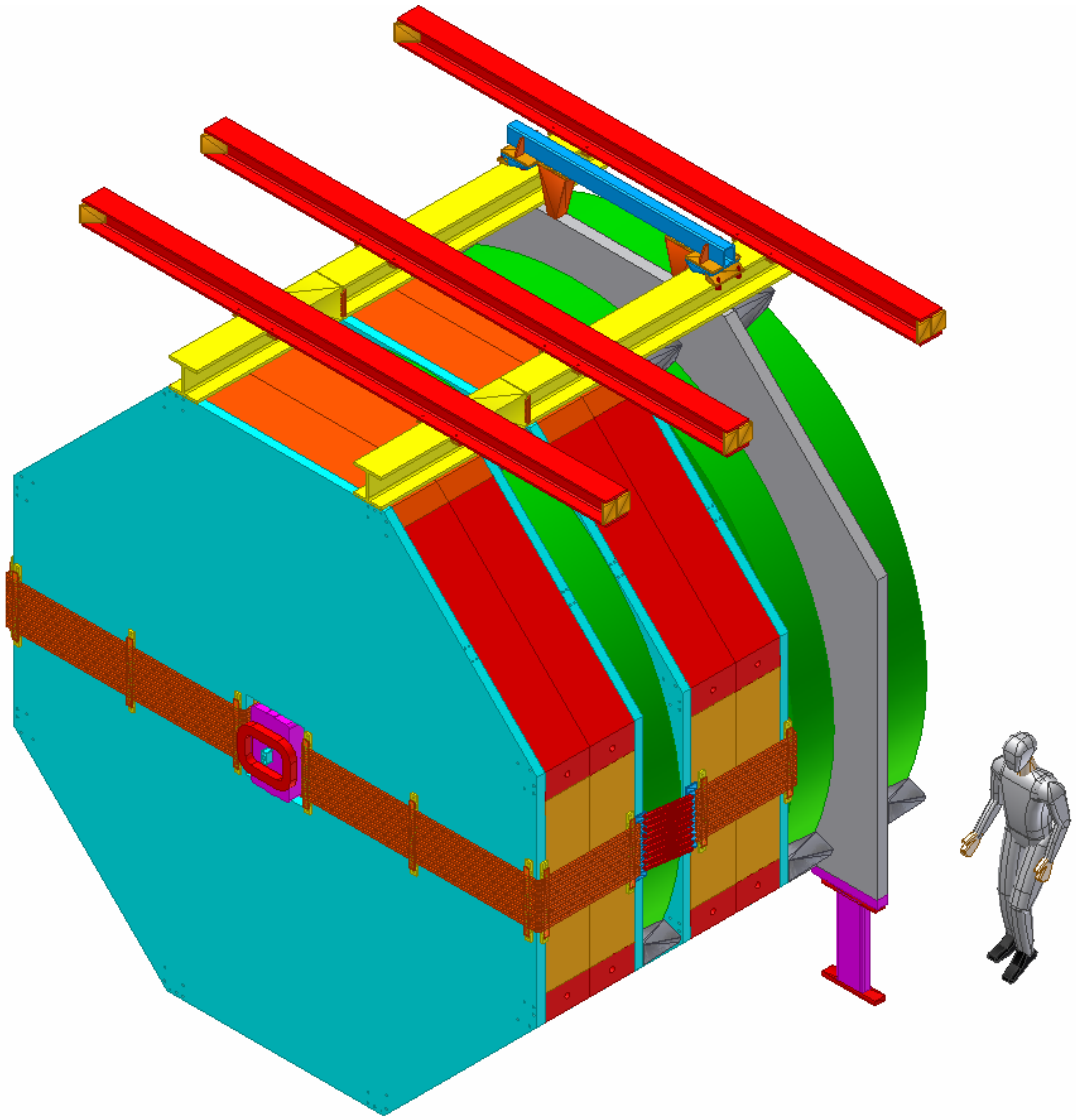

- The entire muon system can move with the toroid package since there are no floor connections.
- The wheels are supported from individual floor rollers during installation and then hung vertically from the overhead beams.

Expected Occupancies

- Minimum bias events will be largest source of hits in detector
- Generated assuming an average of 2 interactions/crossing
  - **OLD** Luminosity of 2×10^{32} and 132 ns bunch spacing

What	Station 1	Station 2	Station 3	Total
avg. # of hits per crossing	42	8	9	54
avg. occupancy	0.34%	0.06%	0.07%	0.15%
max. channel occupancy	2.50%	0.24%	0.52%	
max. channel rate (kHz/cm^2)	3.7	0.4	0.8	

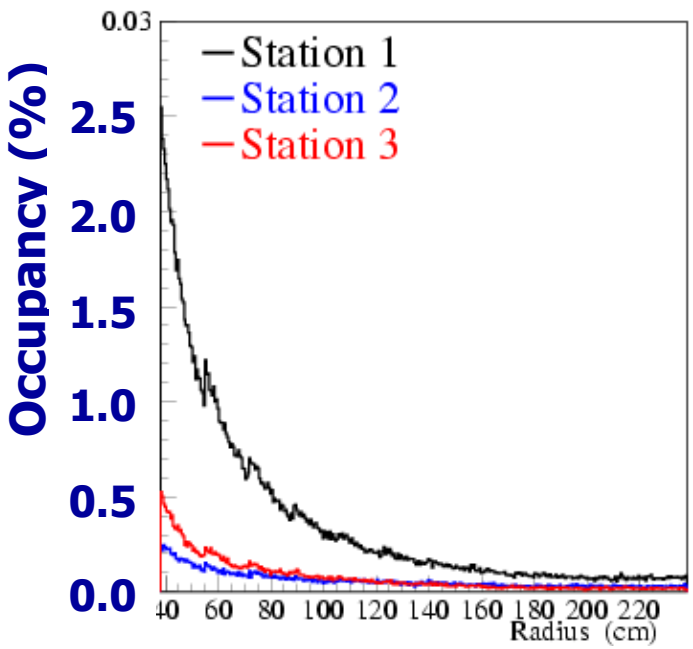

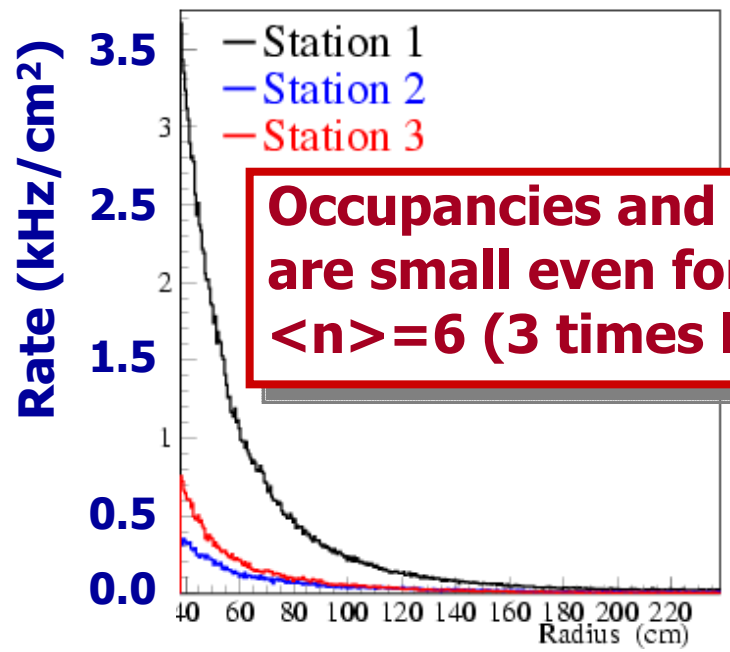

Occupancies and rates are small even for 396ns <n>=6 (3 times larger)

Organization

Base cost: $4.4M (M&S: $3.2M, Labor: $1.2M)

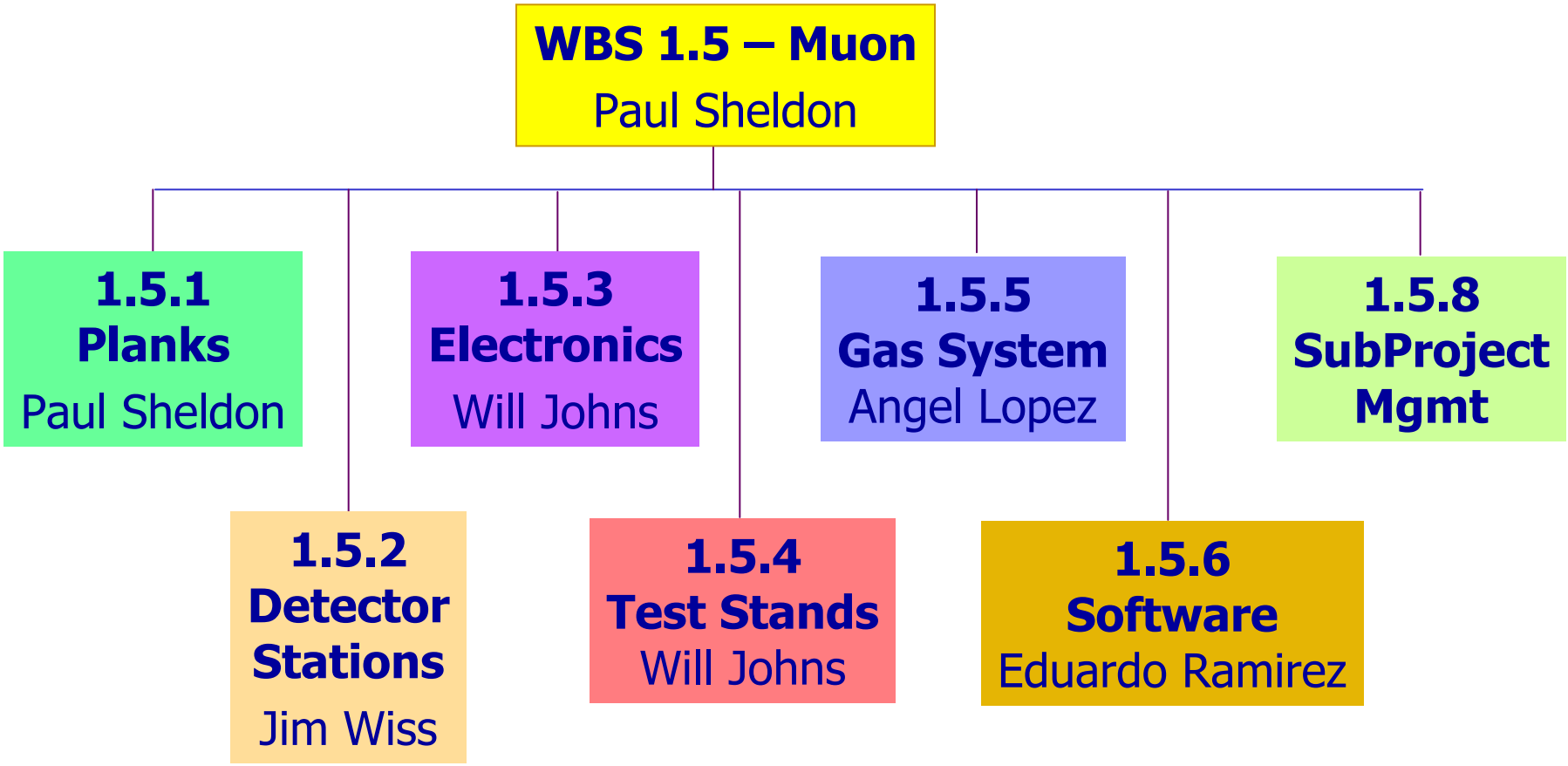

Organization

Base cost: $4.4M (M&S: $3.2M, Labor: $1.2M)

WBS 1.5 – Muon
Paul Sheldon

1.5.1 Planks
Paul Sheldon

1.5.2 Detector Stations
Jim Wiss

1.5.3 Electronics
Will Johns

1.5.4 Test Stands
Will Johns

1.5.5 Gas System
Angel Lopez

1.5.6 Software
Eduardo Ramirez

1.5.8 SubProject Mgmt

Area ∝ Cost

Construction Cost

Activity ID	Activity Name	Base Cost ($)	Material Contingency (%)	Labor Contingency (%)	Total FY05	Total FY06	Total FY07	Total FY08	Total FY09	Total FY10	Total FY05-10
1.5.1	Muon Detector Planks	1,788,686	43	35	203,104	908,305	1,054,901	354,960	0	0	2,521,269
1.5.2	Muon Detector Stations	350,771	40	35	63,436	246,290	136,397	41,013	0	0	487,136
1.5.3	Muon Detector Electronics	1,341,849	41	17	40,118	885,865	415,335	510,614	0	0	1,851,933
1.5.4	Muon Detector Test Stands	156,726	45	50	65,448	42,949	119,421	0	0	0	227,818
1.5.5	Muon Detector Gas System	121,319	50	0	0	106,050	66,903	0	0	0	172,953
1.5.6	Muon Detector Software	0	0	0	0	0	0	0	0	0	0
1.5.8	Muon Detector Subproj Mgmt	669,276	24	24	115,275	238,882	238,882	238,882	0	0	831,920
1.5	file_15_092104	4,428,627	41	28	487,380	2,428,341	2,031,839	1,145,468	0	0	6,093,029

M&S Cost Profile by Fiscal Year

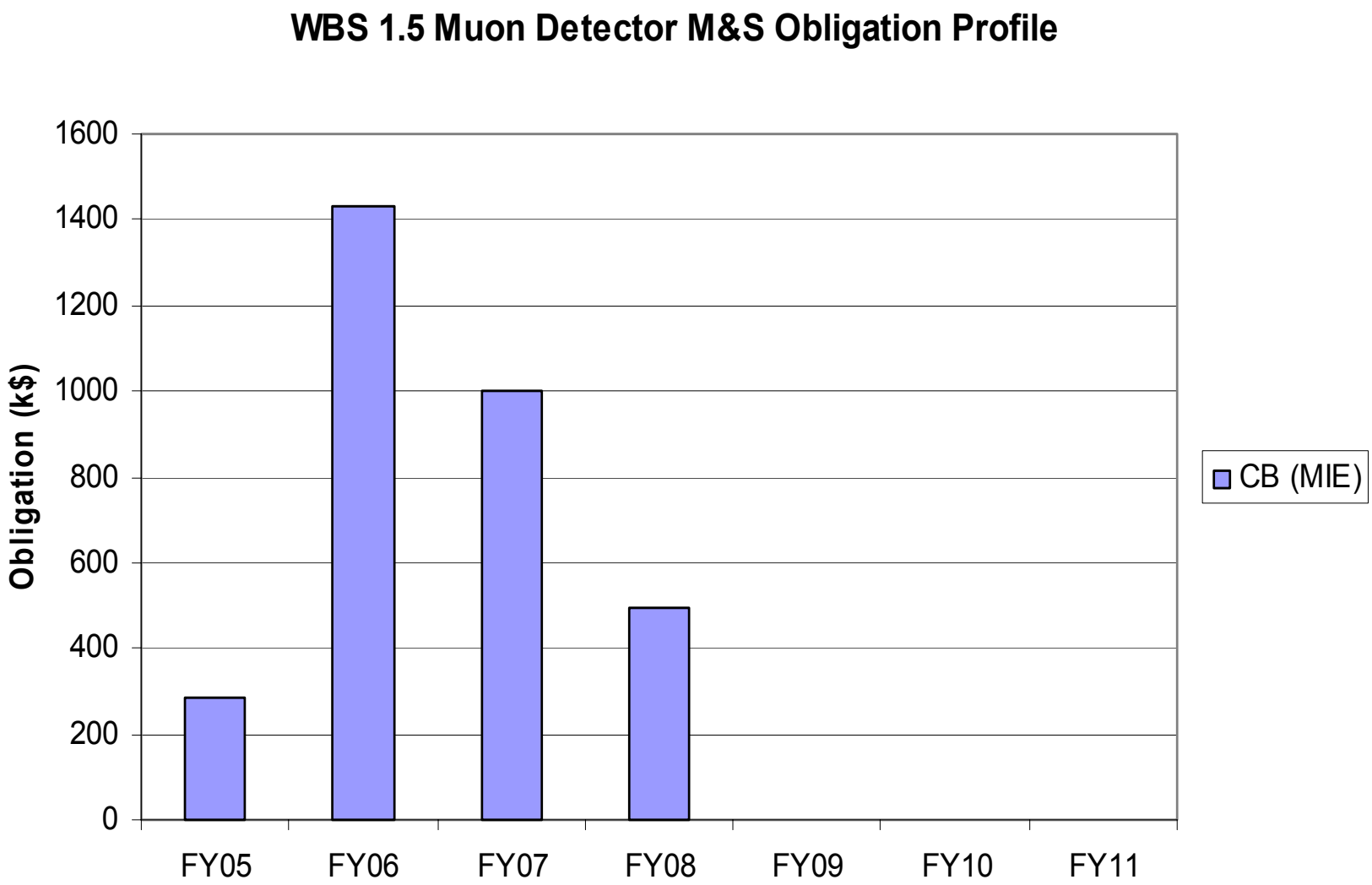

Labor Profile by Fiscal Year

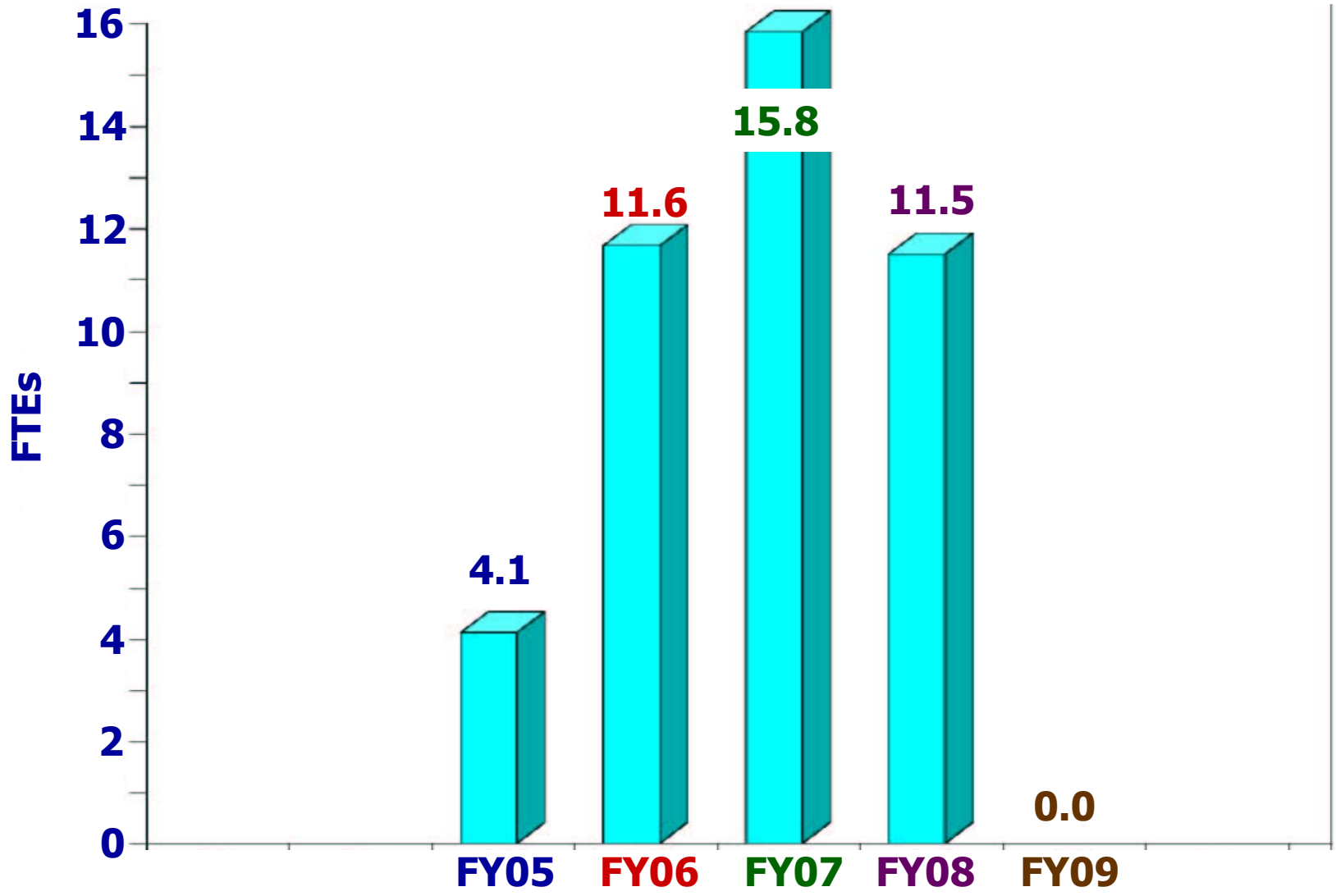

Description of Project Flow

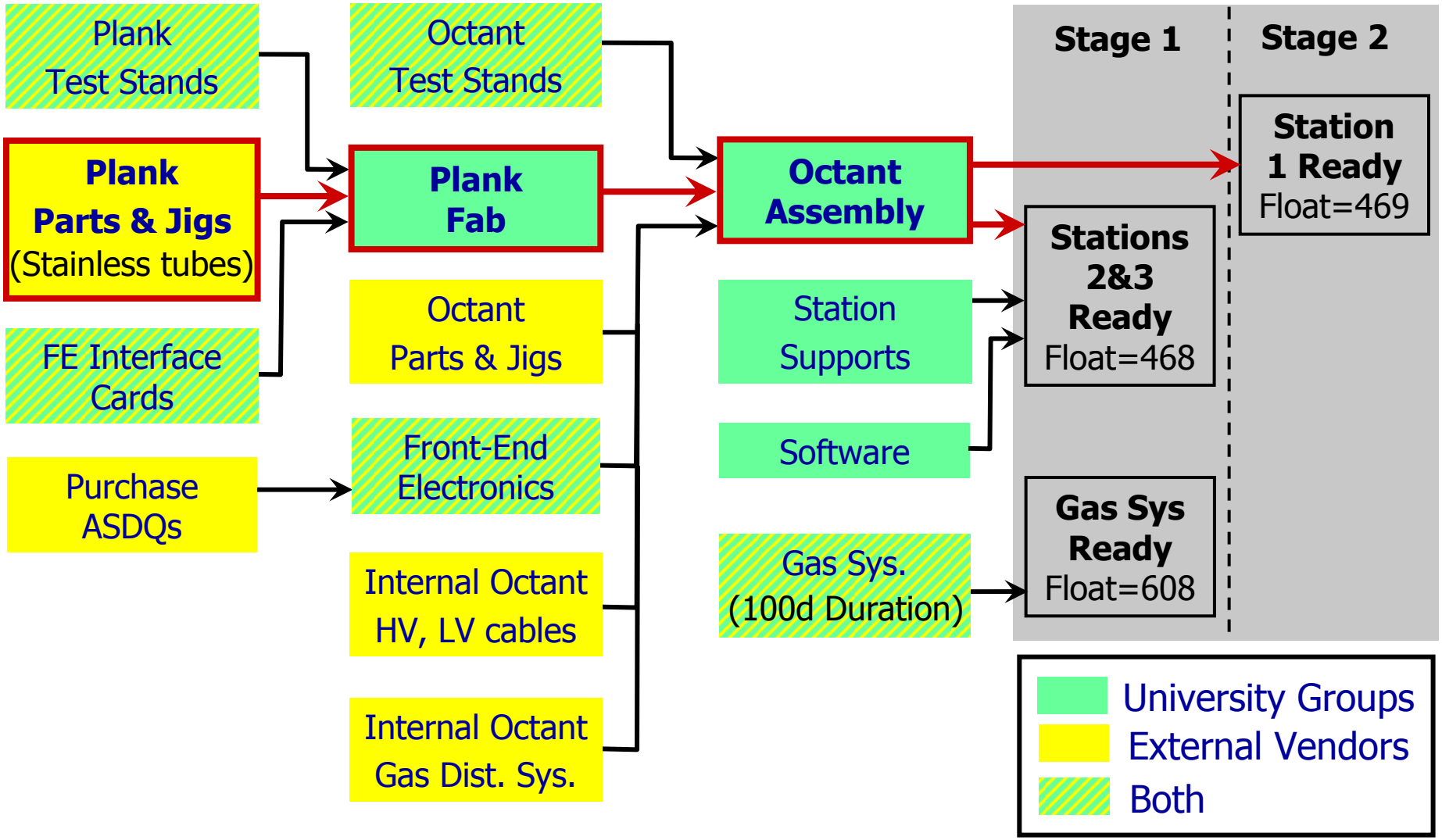

Key Milestones With Distributed Float

BTeV - WBS 1.5 Muon Detector
Selected Key (Critical) Activities

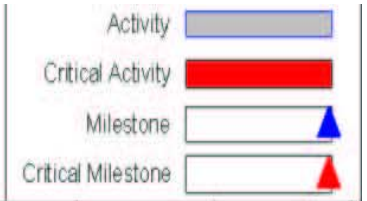

WBS	Activity Desc.	Total Float
.1.2.1.3.1	Manufacture & Del of Pre-Prod Stainless Tubes	73d
.3.1.5.13	Acquisition of ASDQs	283d
.1.4.1.1	Fab Of Pre-Prod Planks at Illinois	91d
.3.1.5.3	Front-End Boards Pre-Prod (VANDERBILT)	283d
.2.4.1.2	Fab Of Pre-Prod Octants at Illinois	511d
.1.2.1.3.2	Manuf & Del Prod Stainless Tubes (1st Ship - 50%)	73d
.1.2.6.2.4	Manufacture & Del of Prod Machined Plank Parts	150d
.1.4.1.2	Fab Prod Planks at Illinois	73d
.2.4.2	Fab Muon Octants at Vanderbilt	73d
.3.1.5.10	Front-End Boards Prod (VANDERBILT)	283d
.9.1.3.1	Lk4M: First Muon Station Ready	318d
.9.1.3.2	Lk4M: Second Muon Station Ready	73d
.9.1.3.3	Lk4M: Third Muon Station Ready	74d
.5.11.1.3	Muon Prod Gas Dist Syst	498d
.9.1.3.4	Lk4M: Muon Gas System Ready	498d

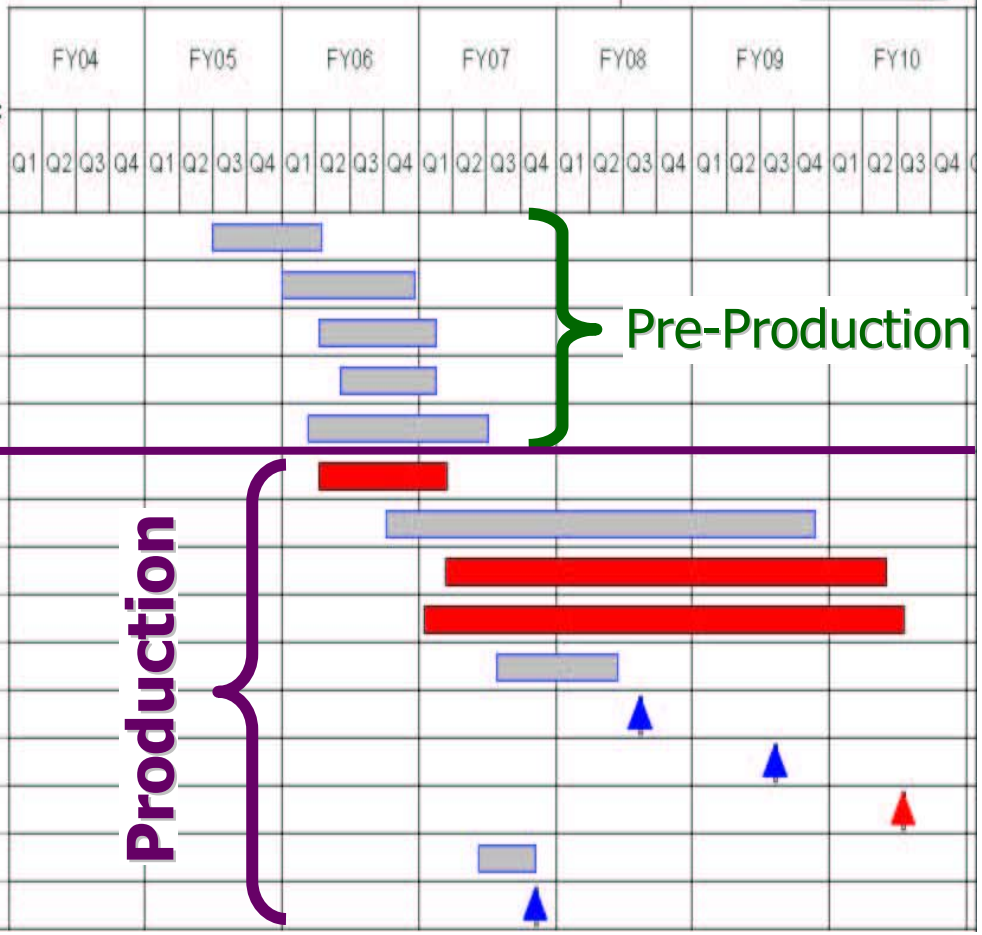

CD-1 Recommendations

- The primary recommendation was that we hire a full-time quality assurance engineer for the duration of the project.
  - After discussing this with project management, it was decided that additional effort will be added to the project office to handle QA issues for BTeV. The muon project will hire a full-time technician to handle QA and project oversight.
  - We have added this technician to our WBS

- Actively pursue forward funding.
  - Vanderbilt has verbally agreed to provide $1M in forward funding. MOU is in preparation.

The End