BTeV Muon (WBS 1.5)

Paul Sheldon ~ Vanderbilt University

- Institutions
- Requirements
- Design
- Project Management
- Costs and Labor
- Schedule and Major Milestones
- FY05 Activities
- Concluding Remarks

Institutions & People

- **Illinois**
  - Mike Haney
  - Vaidas Simaitas
  - Mats Selen
  - Jim Wiss
  - Doris Kim
- **Puerto Rico**
  - Angel Lopez
  - Hector Mendez
  - Eduardo Ramirez
  - Zhong Chao Li
  - Aldo Acosta
- **Vanderbilt**
  - Will Johns
  - Paul Sheldon
  - Med Webster
  - Eric Vaandering
  - John Fellenstein

Legend:
Engineer
Faculty
PostDoc
Technical

Goals & Constraints

- Provides Muon ID and Trigger
  - Trigger & ID for interesting physics states
  - Check/debug pixel trigger
- Fine-Grained tracking + toroids
  - Stand-alone mom./mass trig.
  - Momentum "confirmation" (improves background rej.)
- Requirements & Characteristics
  - 2 mm position resolution
  - Trigger: 500:1 min bias rejection, 80% efficiency for di-muon events
  - 200 mrad maximum acceptance (set by size of hall), 40 mrad minimum (set by beam components)
  - Stations at 9.4, 10.8, & 12 m from IP

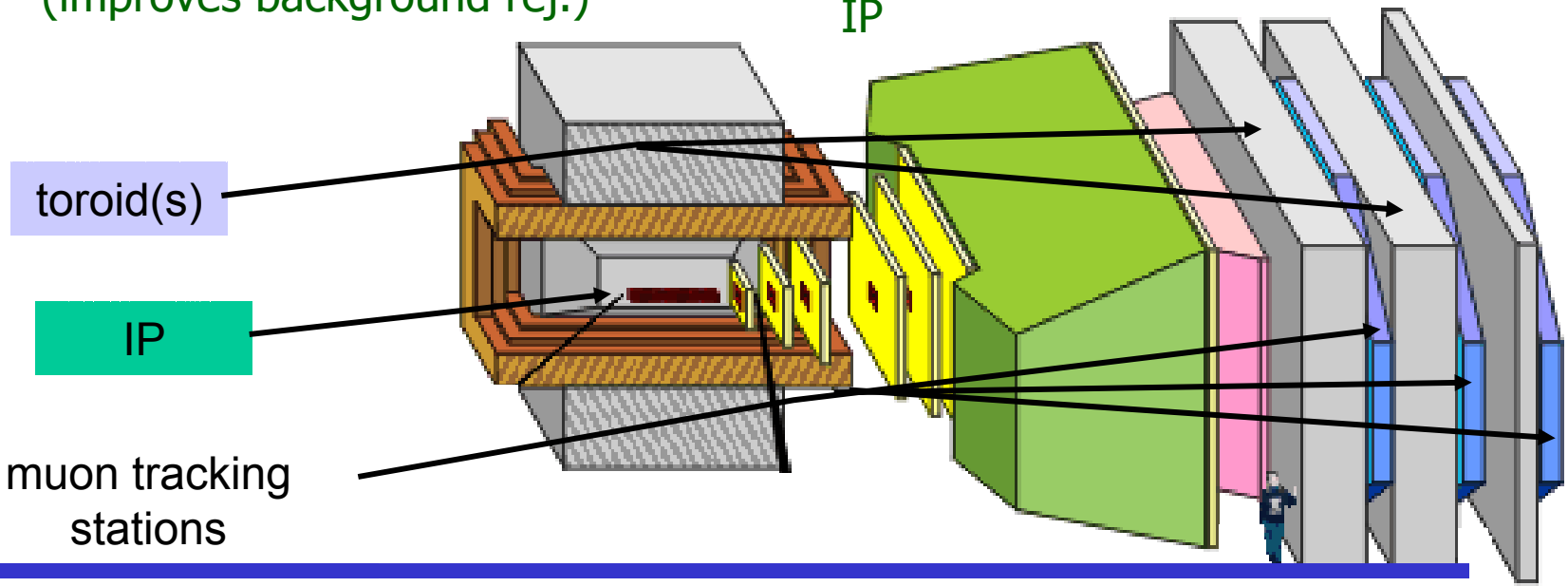

Basic Building Block

- Basic Building Block: Proportional Tube "Planks"
  - 3/8" diameter Stainless steel tubes (0.01" walls)
  - "picket fence" design
  - 30μ (diameter) gold-plated tungsten wire
  - Brass gas manifolds at each end (RF shielding important!)
  - Front-end electronics: use Penn ASDQ chips, modified CDF COT card
  - Likely to use 85% Ar - 15% CO_2 (no CF_4)
  - Robust, high-rate detector element

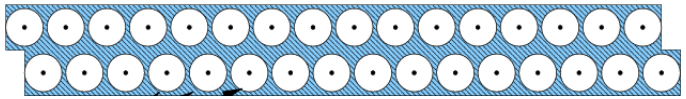

Planks will be built at UI, UPR, & VU (527 ea)

Geometry

- We want to observe tracks in 3 disk shaped ***stations*** 2.4 m in radius:
  - Minimum pattern recognition confusion
  - Minimize occupancy and distribute it uniformly

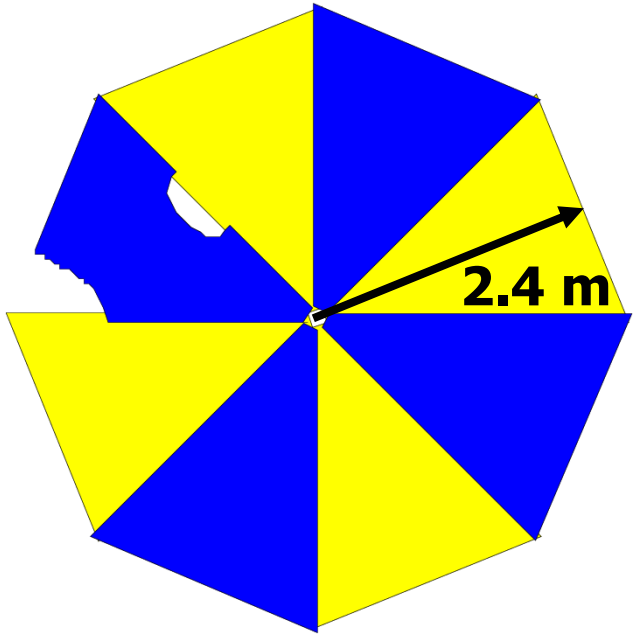

Beams Eye View of each station: divided into overlapping ***octants***

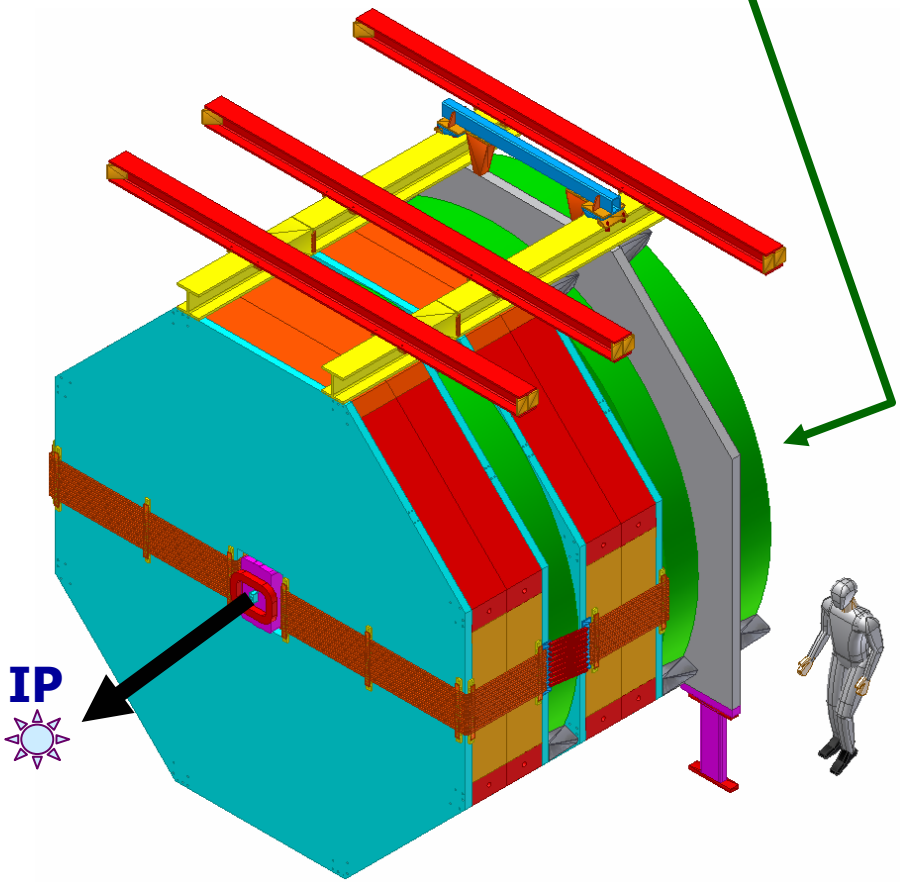

Cover Each Octant Shaped Region with Planks

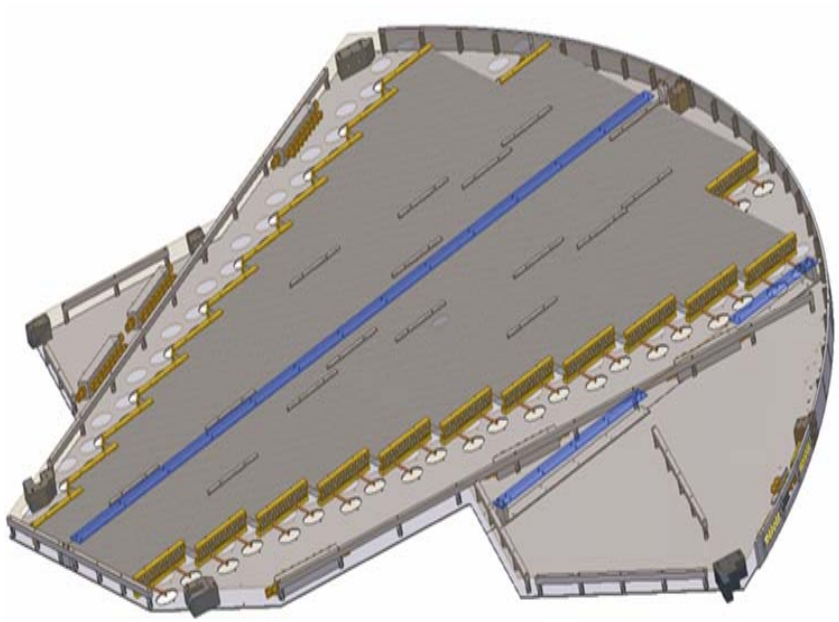

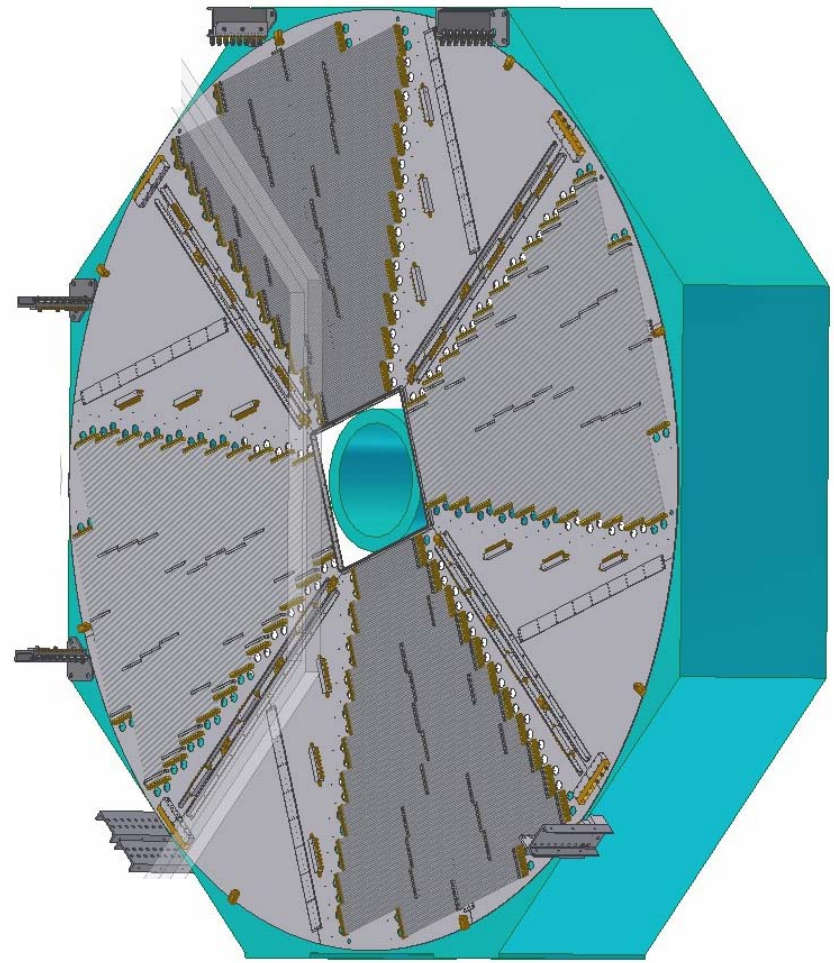

- 4 ***octants*** or ***quads*** make a ***wheel***
- two ***wheels*** are required for full azimuthal coverage.
- Short planks at small radius minimize occupancy there.
- Octant geometry minimizes pattern recognition confusion

Muon Wheel

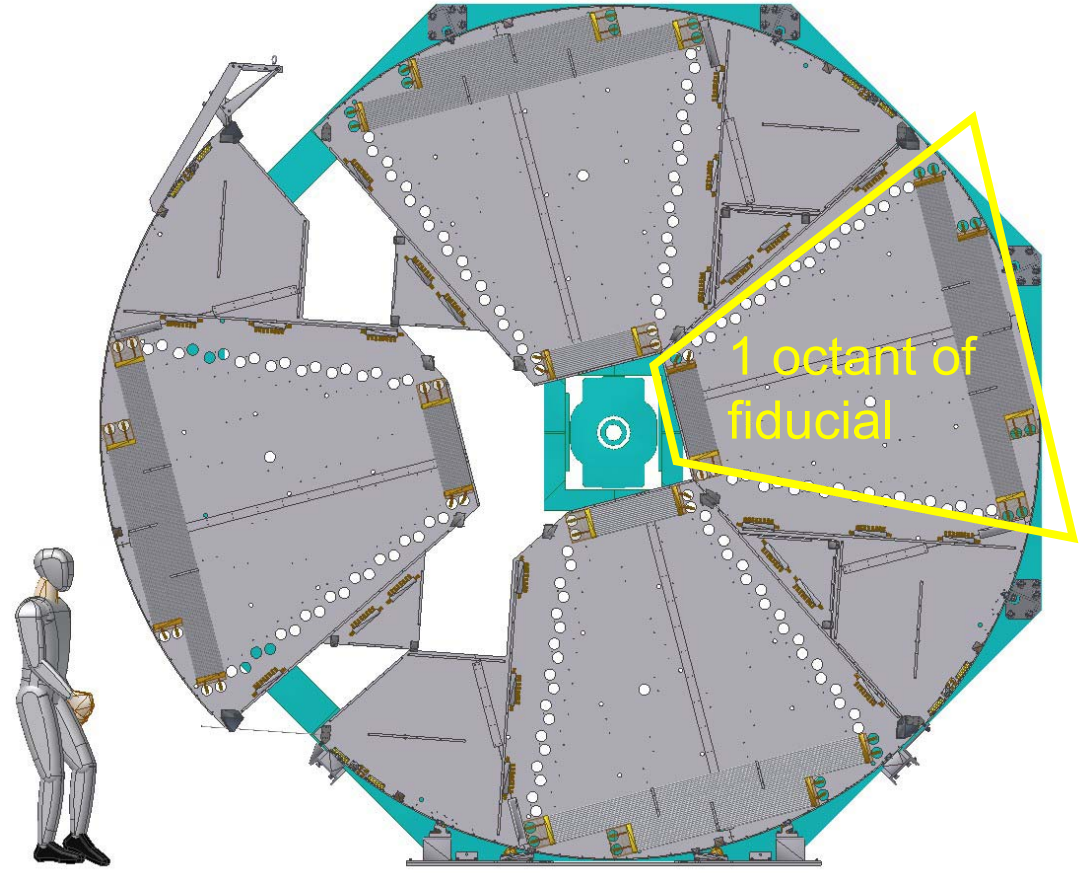

Stereo and Radial Views

12 planks "cover" each octant

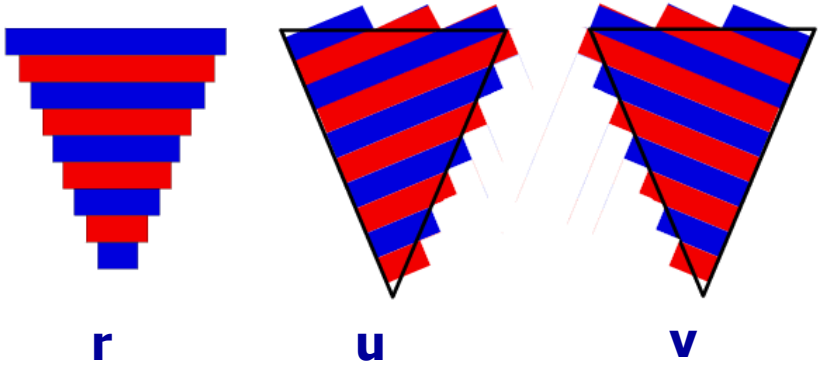

2 stereo views provide ϕ info.

4 views per station (r, u, v, r)

8 wheels per station

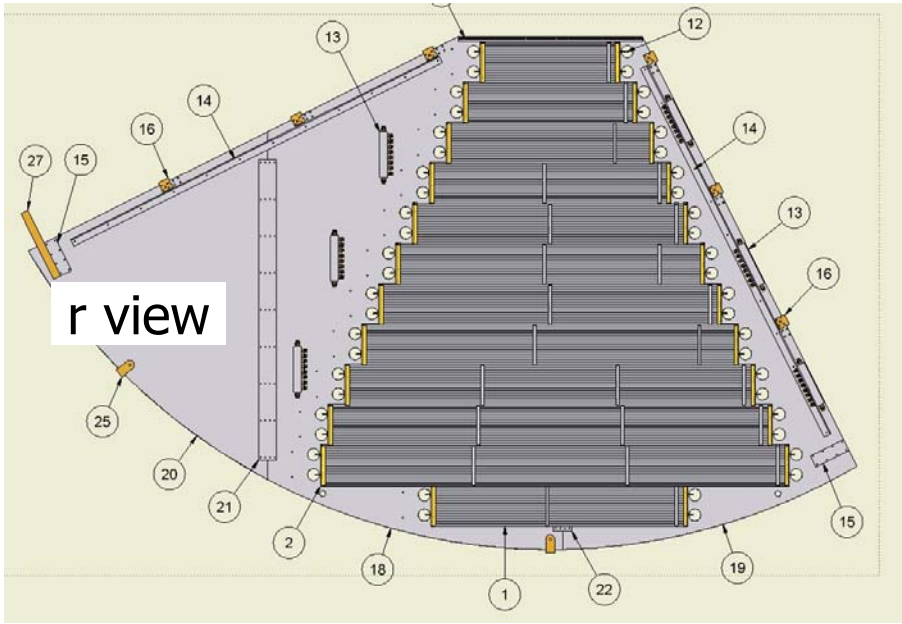

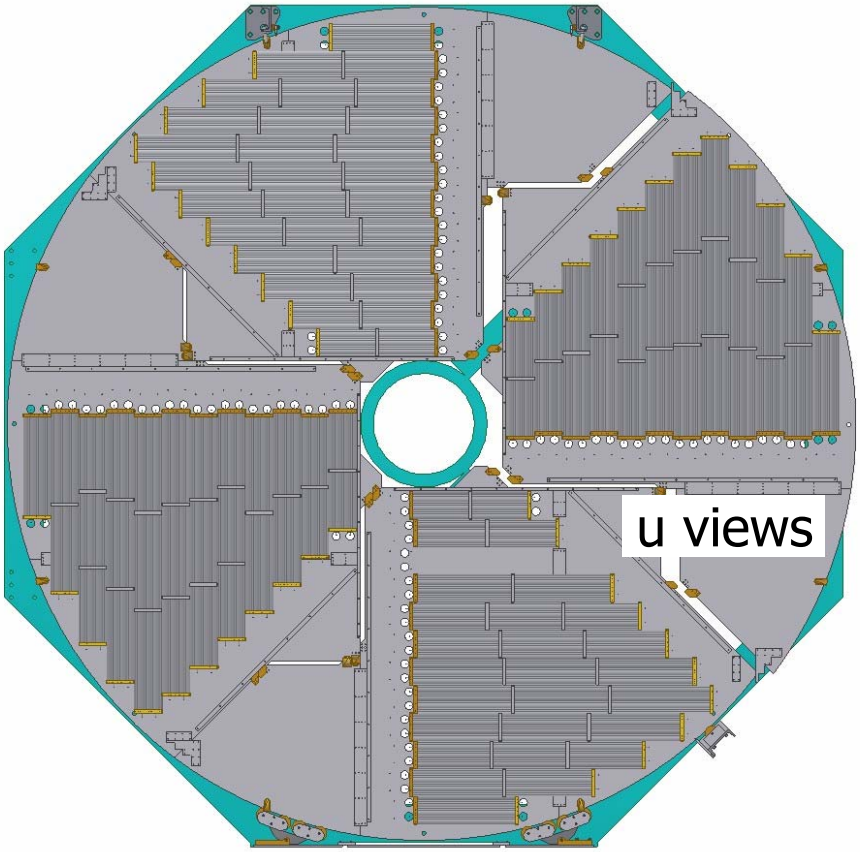

Numerology

- **Base Numerology**
  - 3 stations
  - 4 views per station
  - 8 octants per view
  - 12 planks per octant
  - 32 tubes per plank
  - Wheel = 4 octants
  - 2 pre-production wheels
  - 16 spare octants

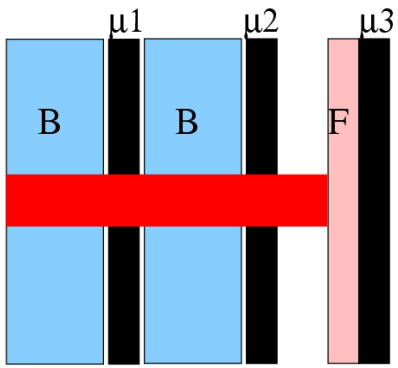

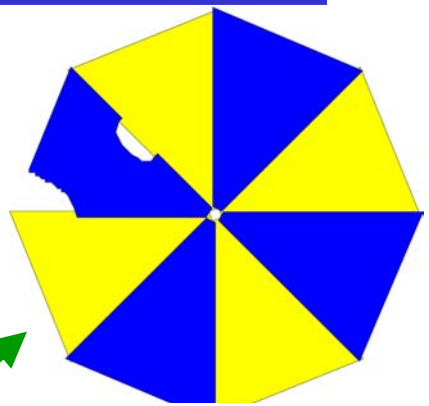

- **For Full Detector:**
  - **36864** channels of tubes
  - **1152** planks
  - **96** quads

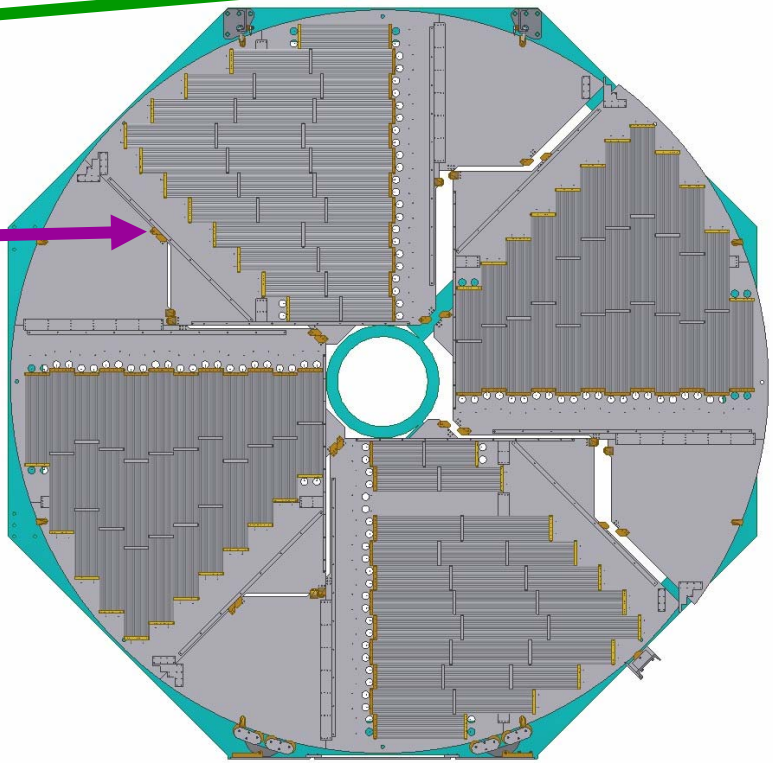

- **Including pre-prod & spares**
  - **46080** channels of tubes
  - **1440** planks
  - **120** quads

Installation Unit: the Octant (or Quad)

- Planks are mounted on an "exoskeleton" made of **100 mil** thick aluminum plates and stiffener bars
- Octants built at UI and VU and sent to FNAL.
- Top cover plate not shown!

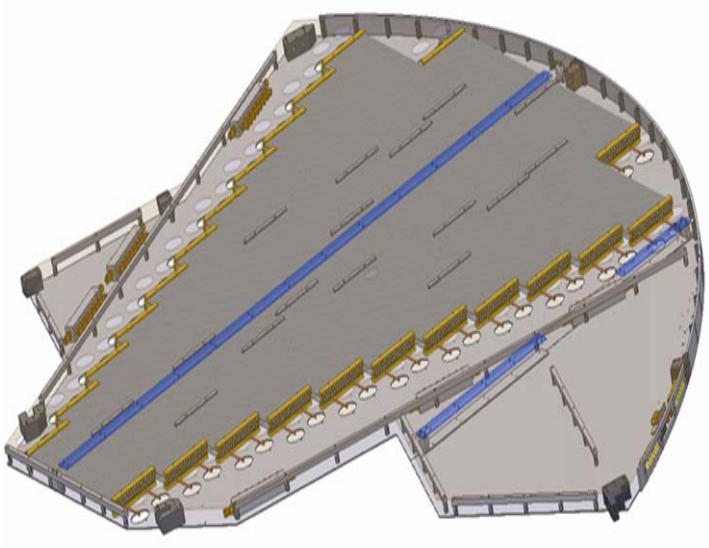

- At **300 lbs.**, octants are light and small enough that handling them is relatively easy.

Prototype Wheel at UI

Installation

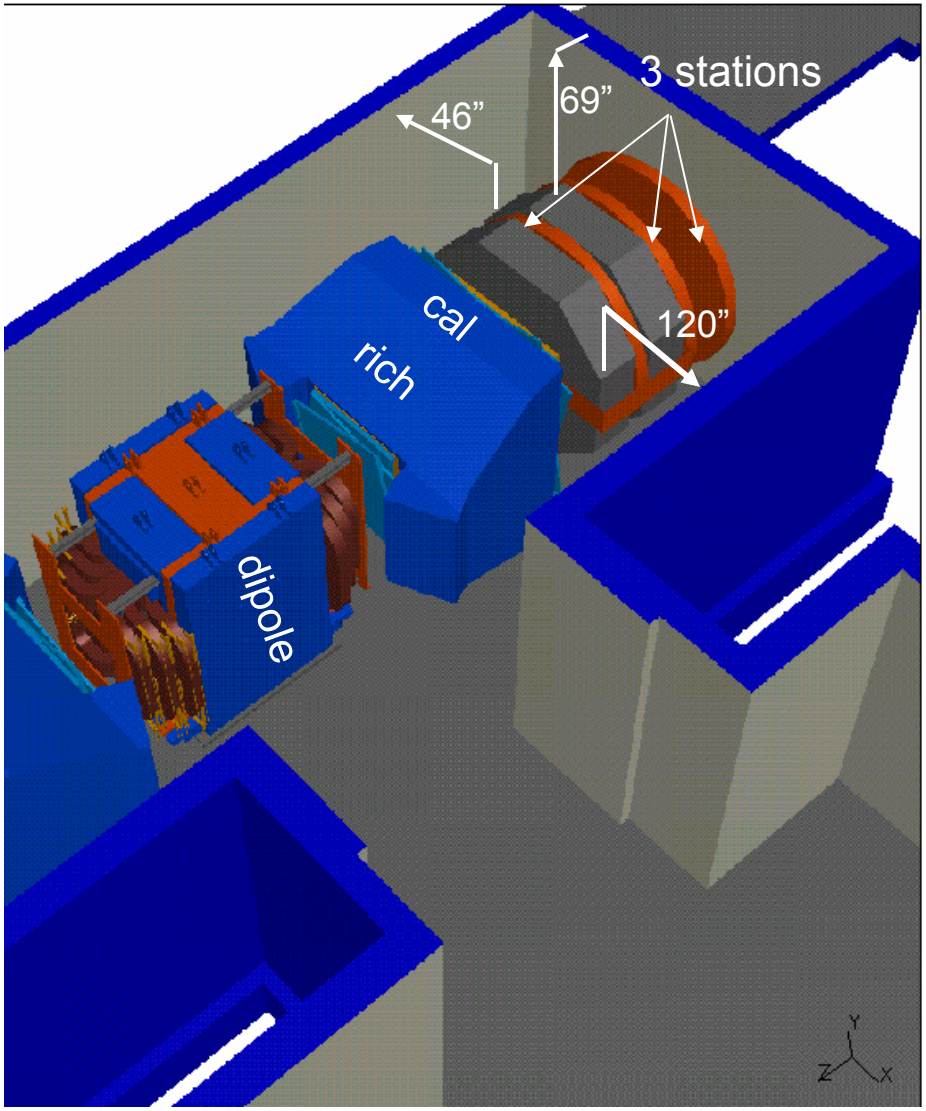

- The small size of the hall gives us little room above or on one side of the detector.
- There is no overhead crane in the hall.
- We require access for maintenance after installation.
- This has forced us to be creative in designing our installation scheme!

Installation

- "Vertical Lazy Susan" installation - rotate during installation on floor rollers

See movie!

- This allows each view to be individually serviced: it will be possible to install and/or remove an octant during run.
- Each octant is installed in wide aisle horizontally.
- Each wheel will then be hung vertically from overhead beams. (next slide…)

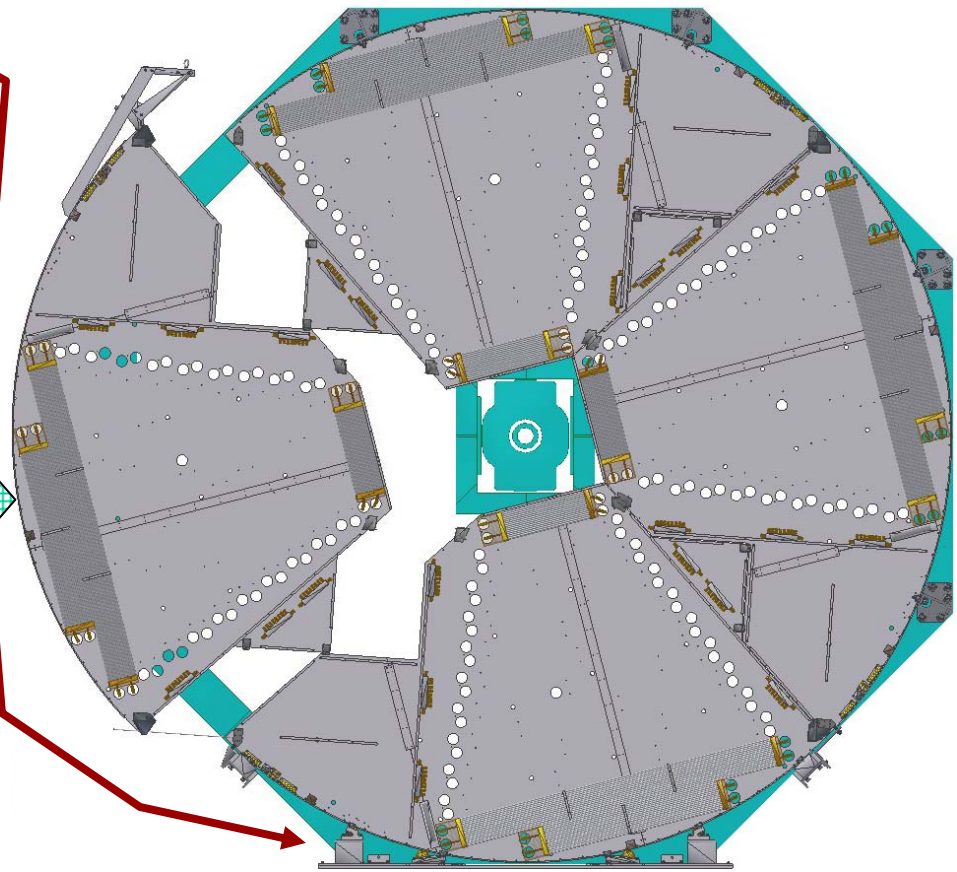

Overhead Support

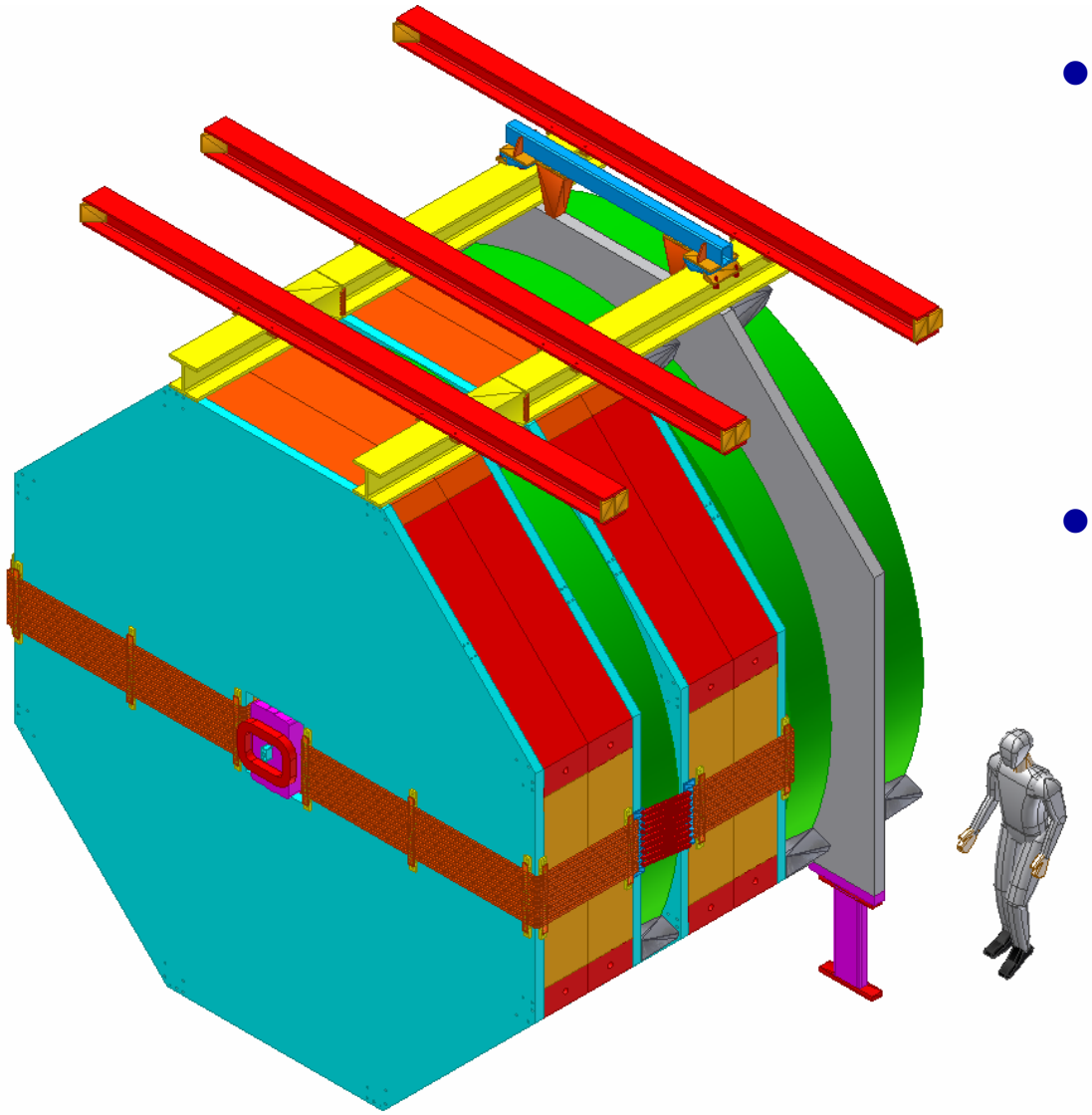

- The entire muon system can move with the toroid package since there are no floor connections once installation is complete.
- The toroid assembly is a separate sub-project (WBS 1.1). We have excellent communication with that project regarding space constraints, installation and integration.

Expected Occupancies

- Minimum bias events will be largest source of hits in detector
- Assuming an average of 6 interactions/crossing

What	Station 1	Station 2	Station 3	Total
avg. # of hits per crossing	126	24	27	162
avg. occupancy	1.00%	0.18%	0.21%	0.45%
max. channel occupancy	7.50%	0.72%	1.56%	
max. channel rate (kHz/cm^2)	3.7	0.4	0.8	

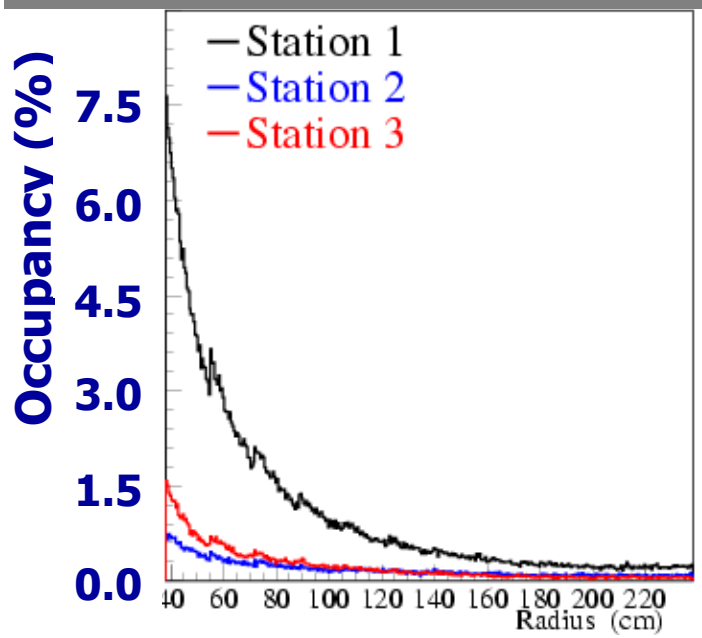

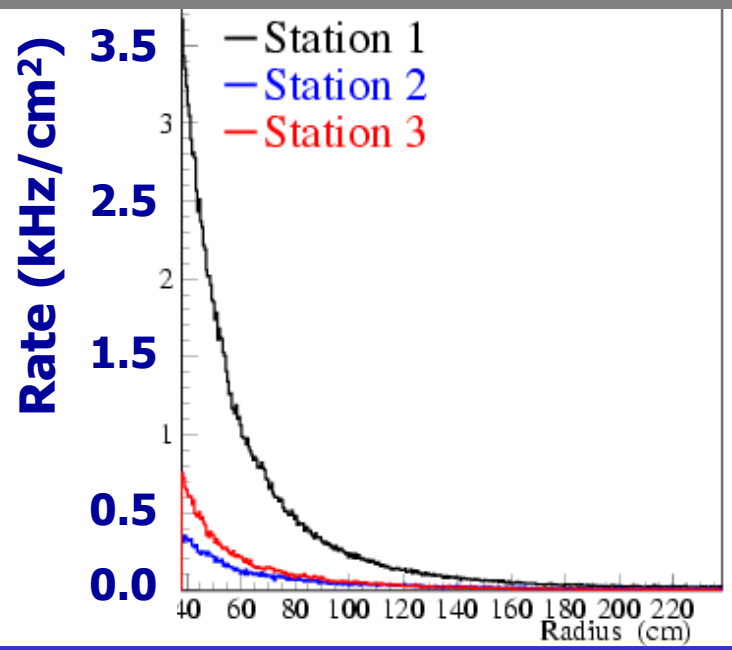

Organization

Base cost, fully burdened, in FY05 dollars:

$4.4M (M&S: $3.2M, Labor: $1.2M)

WBS 1.5 – Muon
Will Johns & Paul Sheldon

- **1.5.1 Planks** — Paul Sheldon
- **1.5.2 Detector Stations** — Jim Wiss
- **1.5.3 Electronics** — Will Johns
- **1.5.4 Test Stands** — Will Johns
- **1.5.5 Gas System** — Angel Lopez
- **1.5.6 Software** — Eduardo Ramirez
- **1.5.8 SubProject Mgmt**

Construction Cost

Fully burdened, in FY05 dollars

Activity ID	Activity Name	Base Cost ($)	Material Contingency(%)	Labor Contingency(%)	Total FY05	Total FY06	Total FY07	Total FY08	Total FY09	Total FY10	Total FY05-10
1.5.1	Muon Detector Planks	1,788,686	43	35	224,448	1,038,534	947,131	309,512	0	0	2,519,625
1.5.2	Muon Detector Stations	350,771	40	35	63,436	330,190	52,498	41,013	0	0	487,136
1.5.3	Muon Detector Electronics	1,342,152	41	17	40,118	885,865	415,790	510,614	0	0	1,852,387
1.5.4	Muon Detector Test Stands	156,726	45	50	65,448	42,949	119,421	0	0	0	227,818
1.5.5	Muon Detector Gas System	121,319	50	0	0	106,050	66,903	0	0	0	172,953
1.5.6	Muon Detector Software	0	0	0	0	0	0	0	0	0	0
1.5.8	Muon Detector Subproj Mgmt	600,916	24	24	30,262	238,882	238,882	238,882	0	0	746,907
1.5	file_15_07Dec04	4,360,570	41	28	423,711	2,642,470	1,840,623	1,100,021	0	0	6,006,826

M&S Cost Profile by Fiscal Year

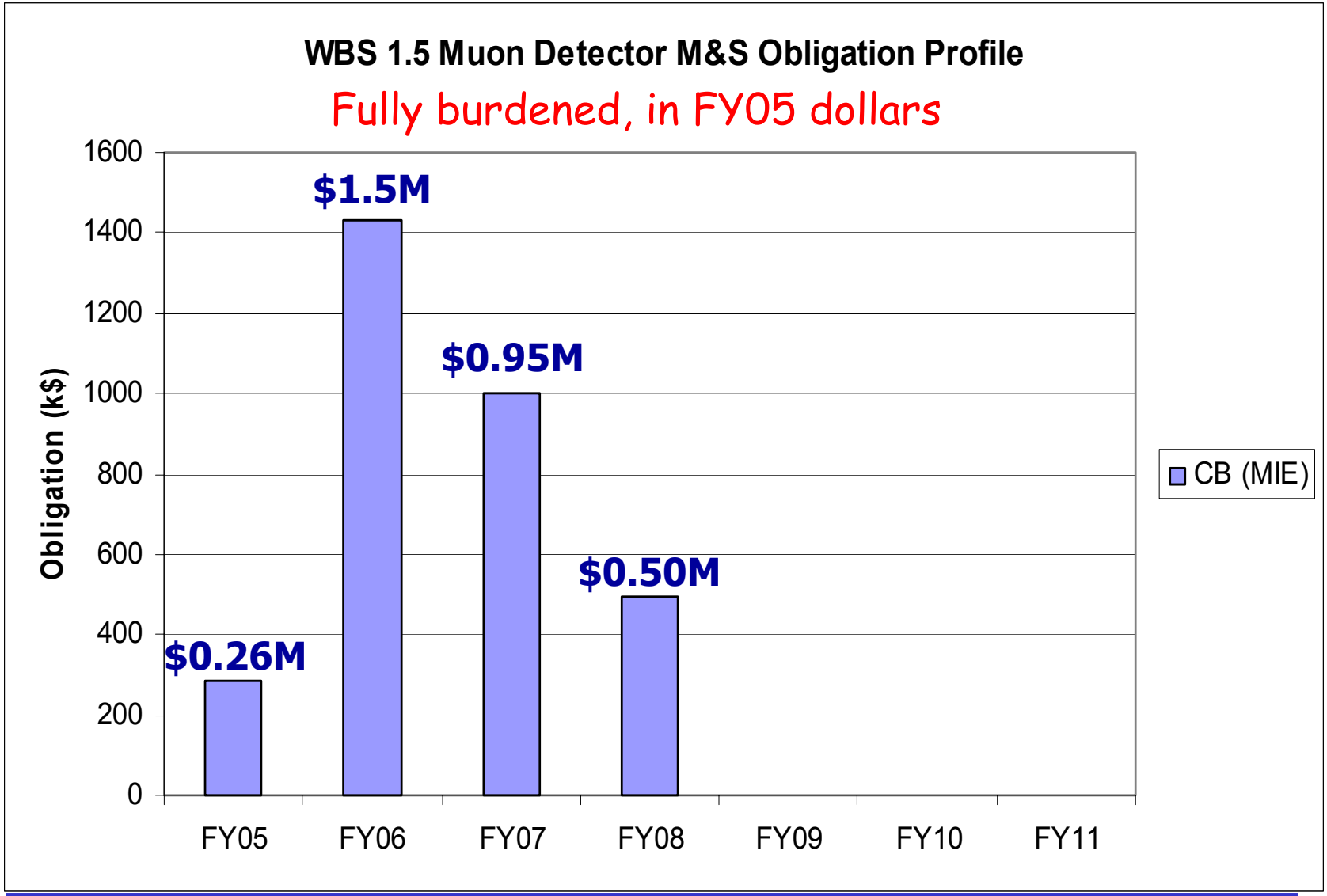

Labor Profile by Fiscal Year

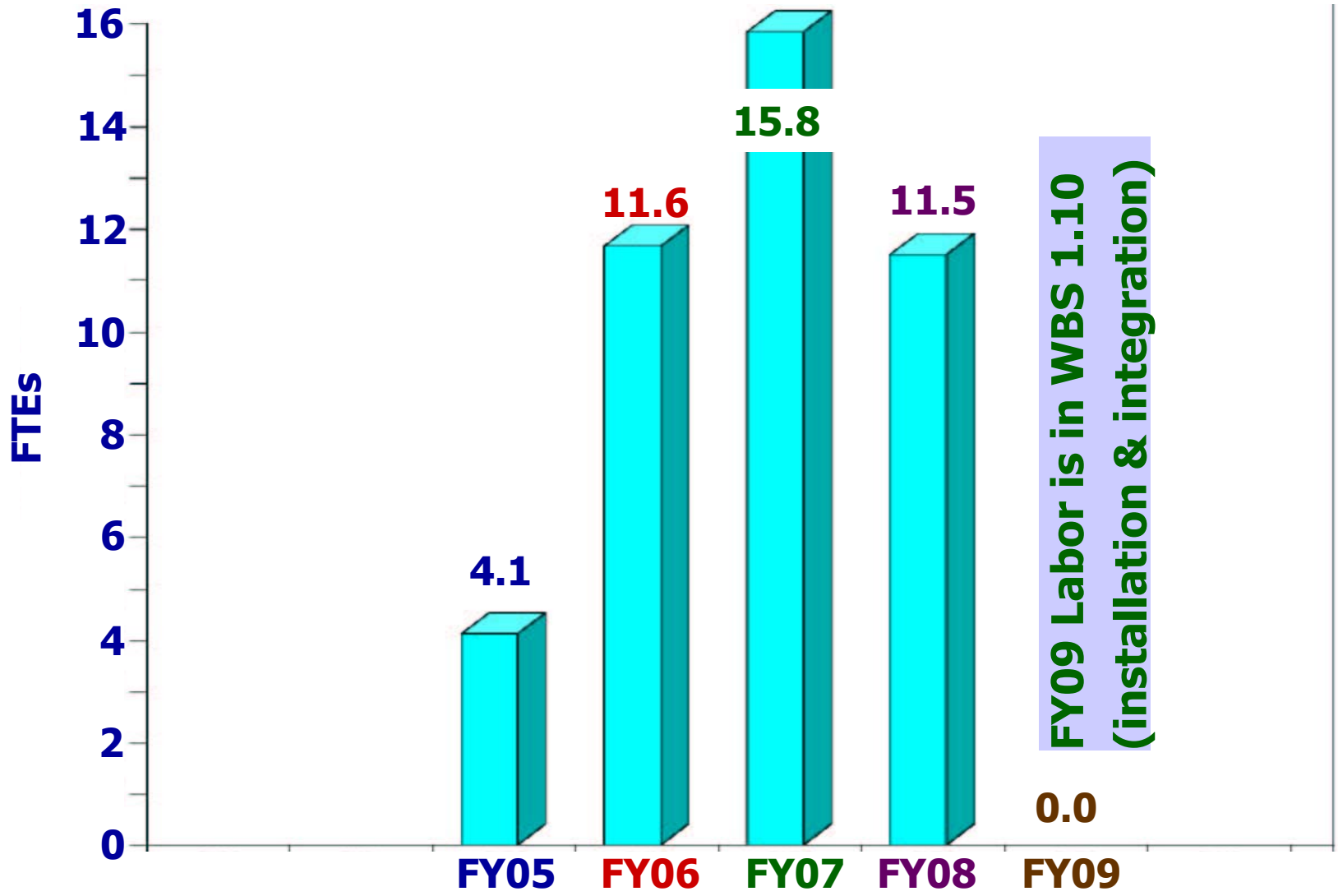

Technical Labor Profile by Fiscal Year

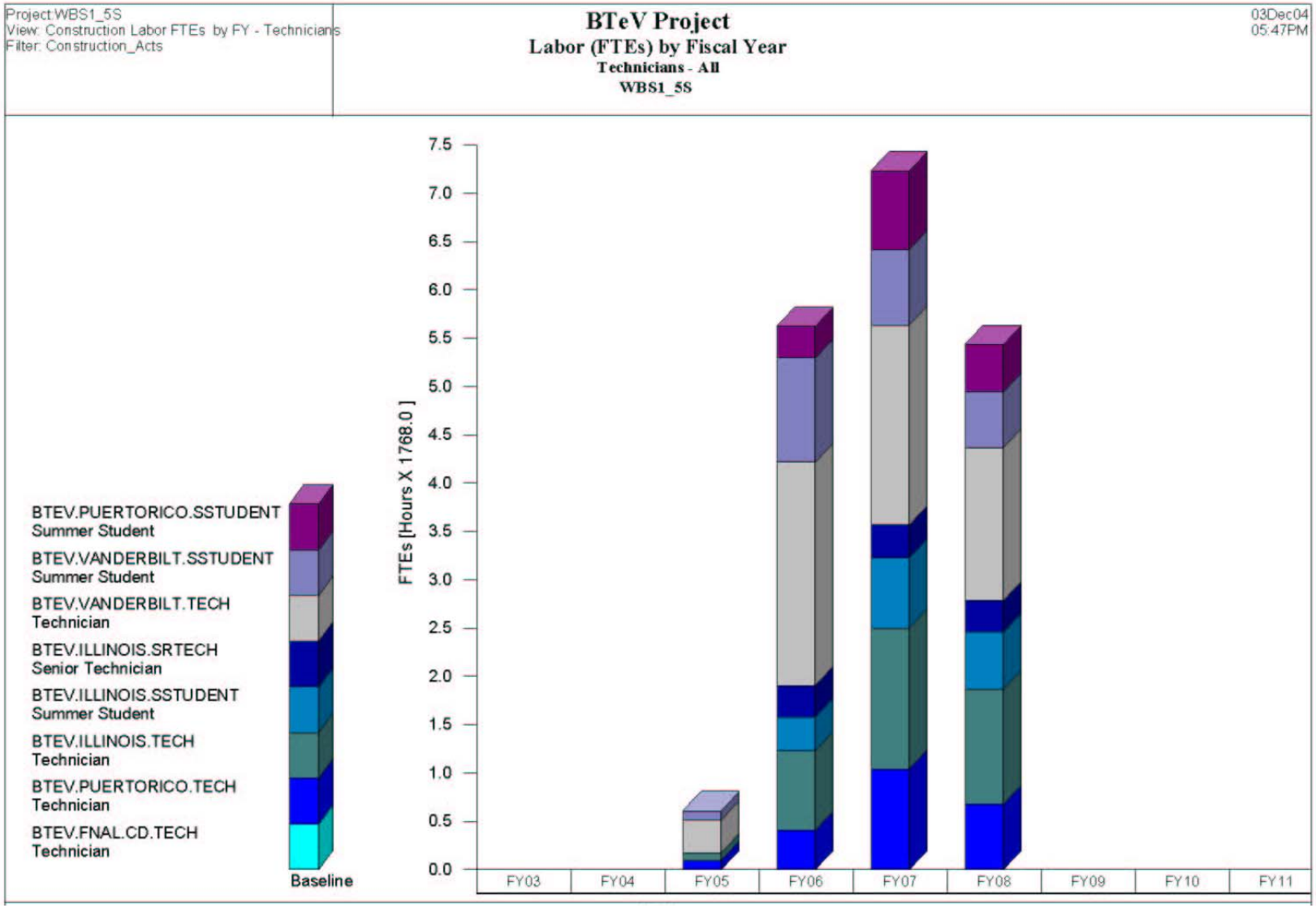

Physicist Labor Profile by Fiscal Year

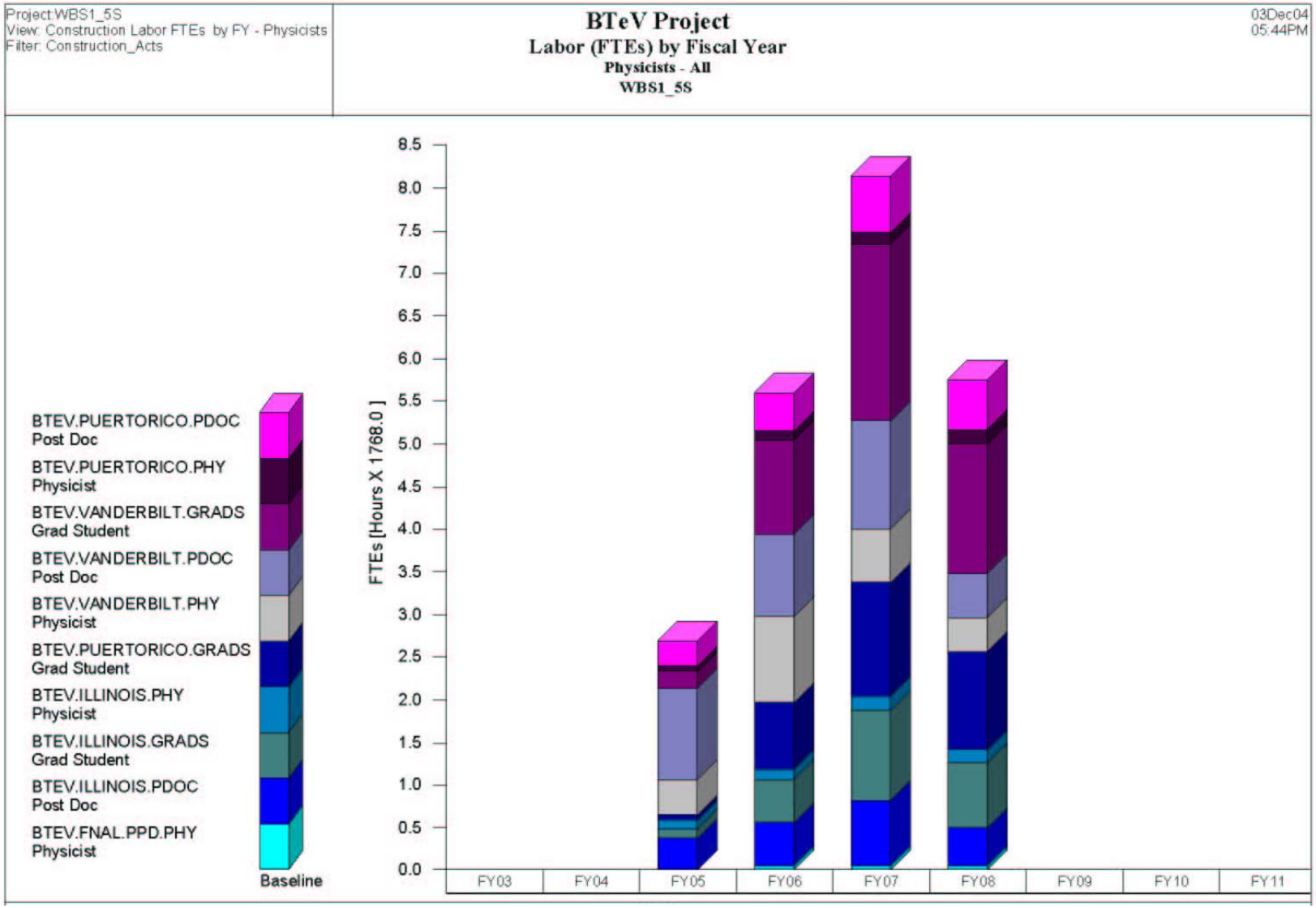

Description of Project Flow

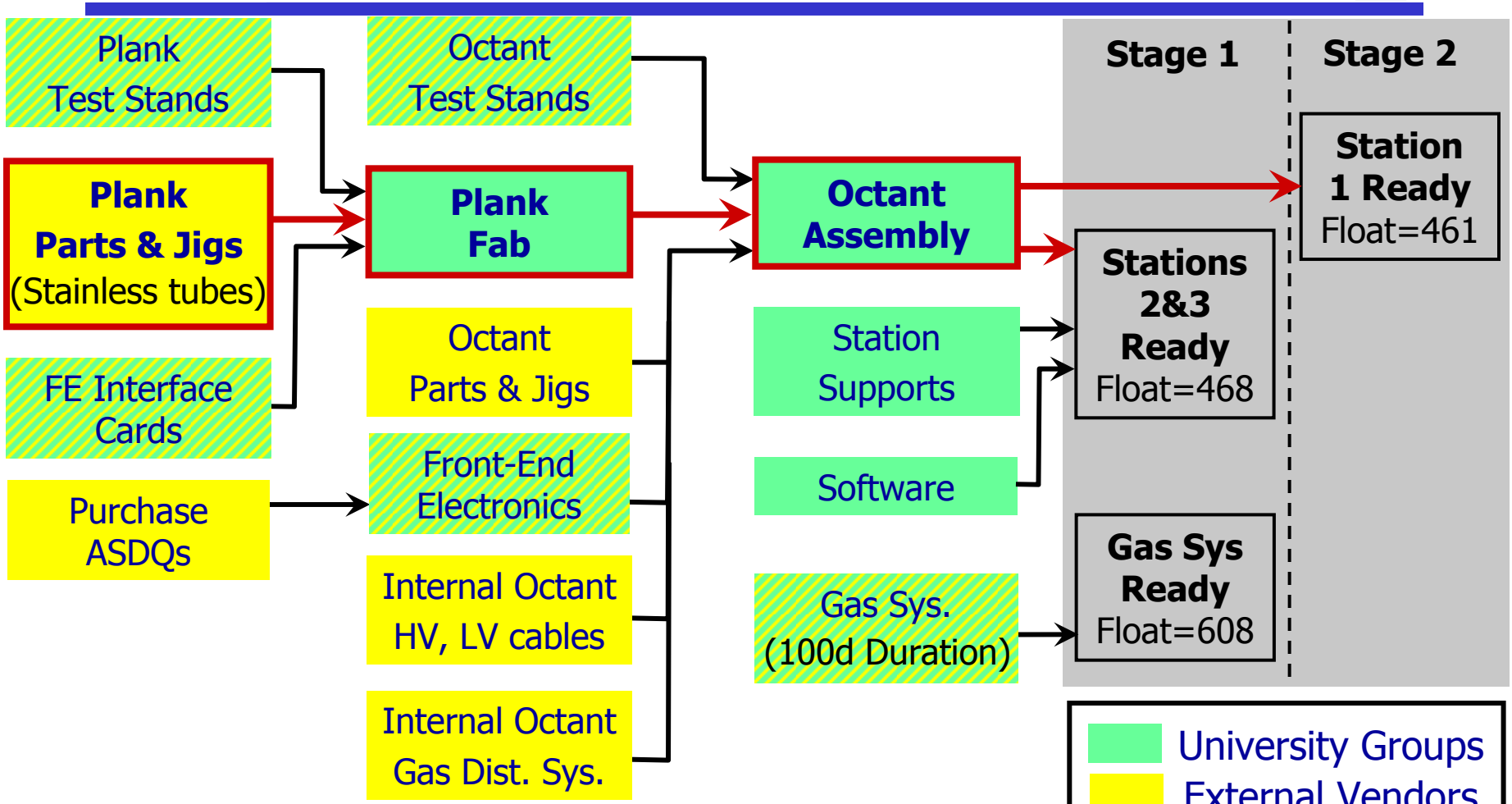

With this much float, why stage?

⇨ *Coordination of Installation and Integration*

Staged Detector

- The Stage 1 Muon System consists of the two downstream muon stations (Stations 2 and 3).
- The Stage 1 System provides offline muon identification.
- Stage 1 does not allow for the Level 1 di-muon trigger.

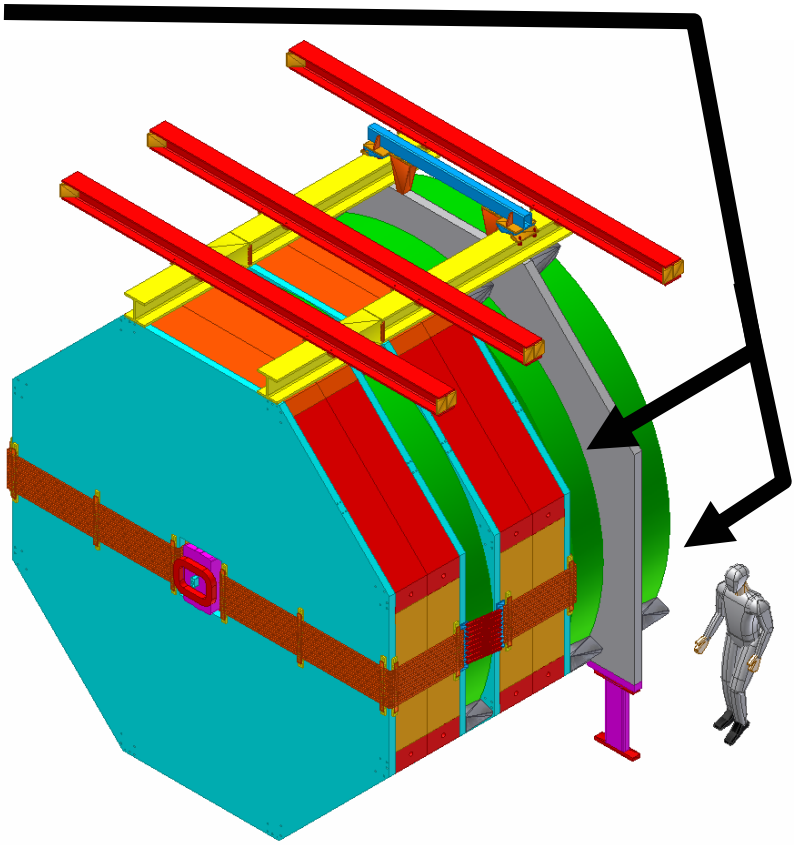

Key Activities and Finish Milestones

BTeV - WBS 1.5 Muon Detector
Selected Key (Critical) Activities

Activity
Critical Activity
Milestone
Critical Milestone

WBS	Activity Desc.	Total Float
1.5.1.2.1.3.1	Manufacture & Del of Pre-Prod Stainless Tubes	471d
1.5.1.4.1.1	Fab Of Pre-Prod Planks at Illinois	486d
1.5.3.1.5.13	Acquisition of ASDQs	503d
1.5.3.1.5.3	Front-End Boards Pre-Prod (VANDERBILT)	503d
1.5.2.4.1.2	Fab Of Pre-Prod Octants at Illinois	694d
1.5.1.2.1.3.2	Manuf & Del Prod Stainless Tubes (1st Ship - 50%)	468d
1.5.1.2.6.2.4	Manufacture & Del of Prod Machined Plank Parts	480d
1.5.1.4.1.2	Fab Prod Planks at Illinois	468d
1.5.2.4.2	Fab Muon Octants at Vanderbilt	468d
1.5.3.1.5.10	Front-End Boards Prod (VANDERBILT)	503d
1.5.9.1.3.1	Lk4M: First Muon Station Ready	538d
1.5.9.1.3.2	Lk4M: Second Muon Station Ready	468d
1.5.9.1.3.3	Lk4M: Third Muon Station Ready	461d

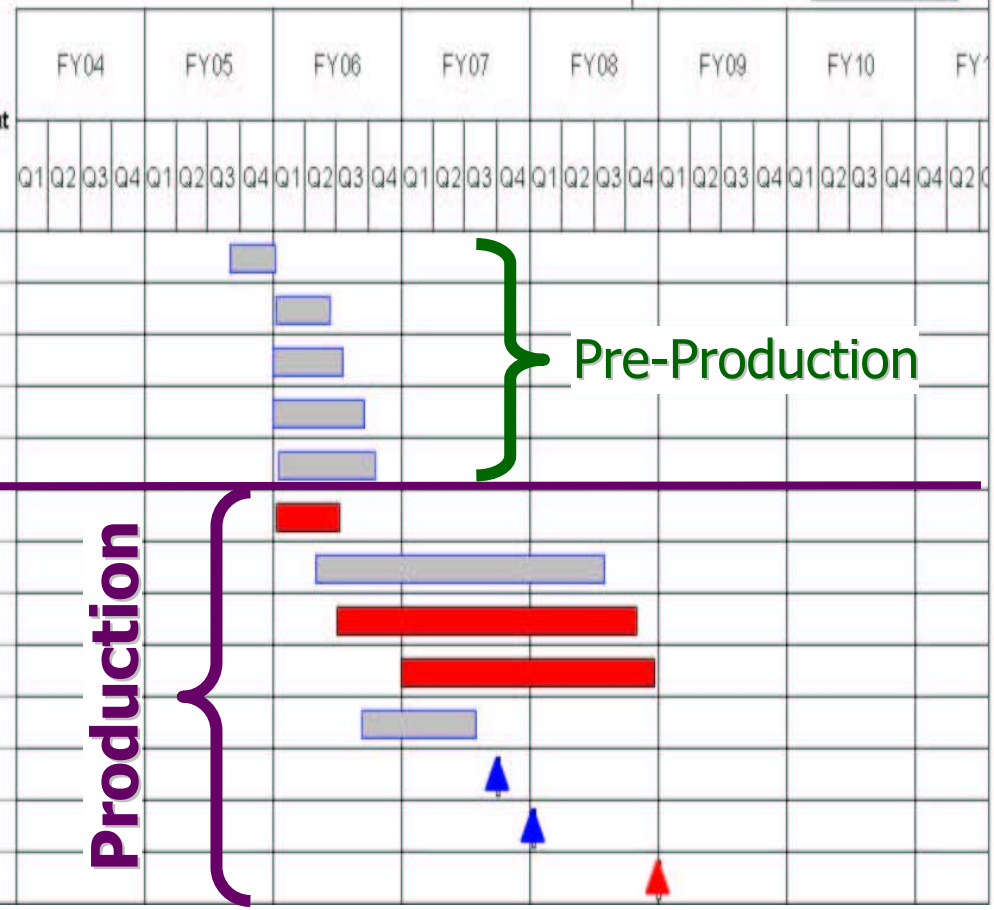

CD-1 Recommendations

- The primary recommendation was that we hire a full-time quality assurance engineer for the duration of the project.
  - After discussing this with project management, it was decided that additional effort will be added to the project office to handle QA issues for BTeV. The muon project will hire a full-time technician to handle QA and project oversight.
  - We have added this technician to our WBS

- Actively pursue forward funding.
  - Vanderbilt has agreed to provide $1M in forward funding. Paperwork is in preparation.

FY05 Activities

- For FY05, we have scheduled only those Project Engineering and Final Design Activities necessary to keep the project on cost and schedule
- Begin our planned "pre-production" of ~100 planks and 8 octants.
  - Use to shake down our assembly lines and quality assurance programs at each institution
  - Train our QAP technician and assembly personnel
  - Dress rehearsal for part production in Vanderbilt shop.
  - Make final design tweaks before production
  - This activity will begin in FY05 but not be complete until 3rd Qtr of FY06
- Costs are for parts needed, assembly jigs and hardware, test stands
  - Only those parts, test stands, etc., that are needed in FY05.
  - Quad test stand not purchased until FY06
- Have $90K in R&D funds from NSF as well.

Significant Experience

- **We have significant experience w/ many of the steps necessary to build and install the muon system**
  - Built roughly 2 dozen planks, *with student labor*
  - Designed, built and used many of the test stands that we will use in our quality assurance program (tension measurement, etc.)
  - Built a full scale model of one wheel, using it to investigate support and installation issues
  - During the past year, significant engineering on mechanical support structure, now have a well-developed design
  - We have a well-developed design for the Front-End electronics and we have verified its properties with prototypes

Tension Test Stand

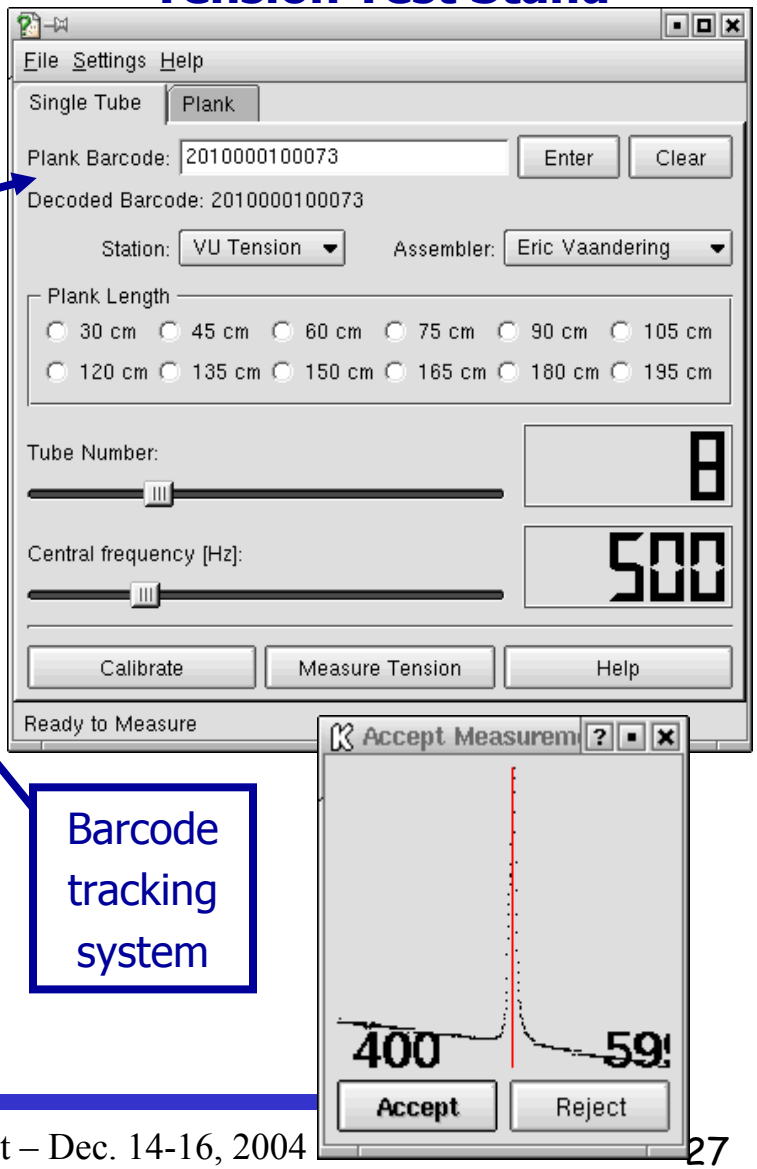

Barcode tracking system

Concluding Remarks

- **We have dealt with many of the vendors we will use**
  - Vanderbilt shop has fabricated the parts it has to make
  - Stainless tube vendors, …
  - Penn ASDQ's
- **The labor required is modest (43 FTE years) and well-matched to the size of the research groups already on-board.**
  - Physicist ("off-project") labor reqd is already present in our groups
  - student labor required is not larger than is typically present in each of our groups
- **We have chosen a robust, easy to build, well understood detector technology and our studies indicate that it is well matched to our problem.**
  - This includes a well-developed and engineered design for the mechanical structure and support
- **Technical Design is complete, although we anticipate a few tweaks.**

…Concluding Remarks

- **We have a well defined and complete Project Cost and Schedule**
  - **Significant float of over 460 days**
- **Sub-project management is in place and capable of performing the project**
- **MOU between Fermilab and Vanderbilt is complete and has been signed by all parties**
  - **Illinois and Puerto Rico MOUs in progress**
- **FY05 Project Engineering and Design work is essential to keeping the project on cost and schedule.**

The End

Description of Project Flow With Distributed Float

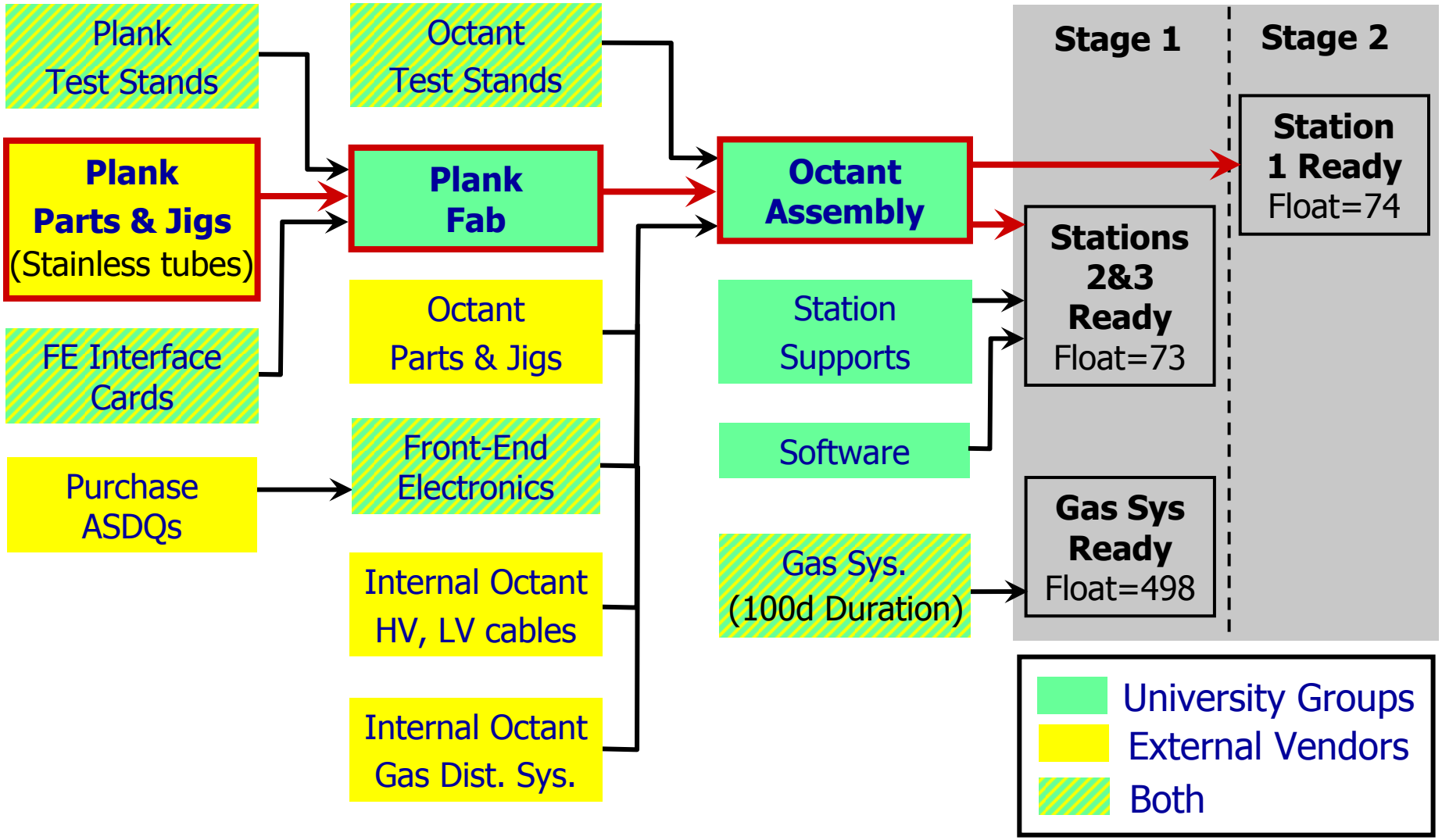

Key Milestones With Distributed Float

BTeV - WBS 1.5 Muon Detector
Selected Key (Critical) Activities

WBS	Activity Desc.	Total Float
.1.2.1.3.1	Manufacture & Del of Pre-Prod Stainless Tubes	73d
.3.1.5.13	Acquisition of ASDQs	283d
.1.4.1.1	Fab Of Pre-Prod Planks at Illinois	91d
.3.1.5.3	Front-End Boards Pre-Prod (VANDERBILT)	283d
.2.4.1.2	Fab Of Pre-Prod Octants at Illinois	511d
.1.2.1.3.2	Manuf & Del Prod Stainless Tubes (1st Ship - 50%)	73d
.1.2.6.2.4	Manufacture & Del of Prod Machined Plank Parts	150d
.1.4.1.2	Fab Prod Planks at Illinois	73d
.2.4.2	Fab Muon Octants at Vanderbilt	73d
.3.1.5.10	Front-End Boards Prod (VANDERBILT)	283d
.9.1.3.1	Lk4M: First Muon Station Ready	318d
.9.1.3.2	Lk4M: Second Muon Station Ready	73d
.9.1.3.3	Lk4M: Third Muon Station Ready	74d
.5.11.1.3	Muon Prod Gas Dist Syst	498d
.9.1.3.4	Lk4M: Muon Gas System Ready	498d

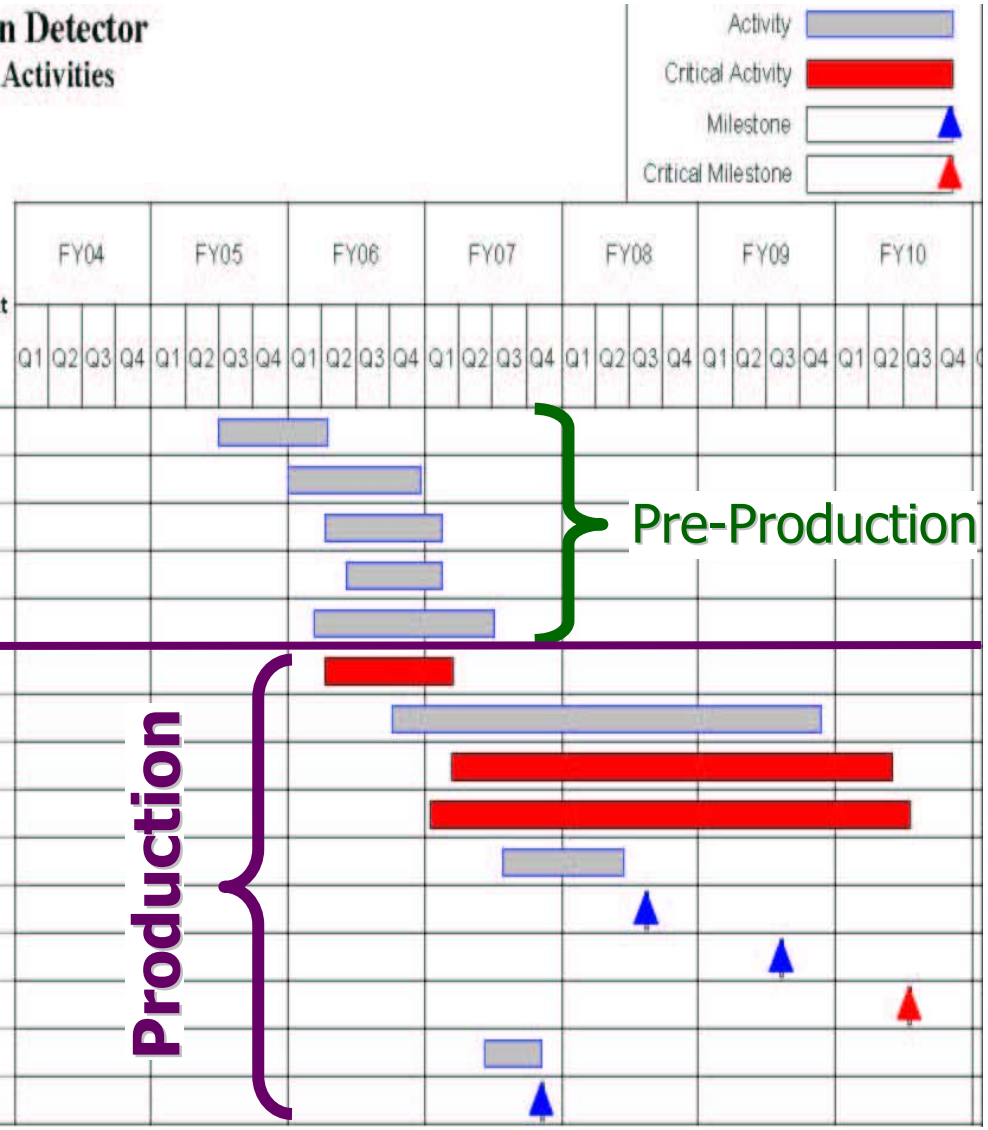

Key Milestones With Distributed Float
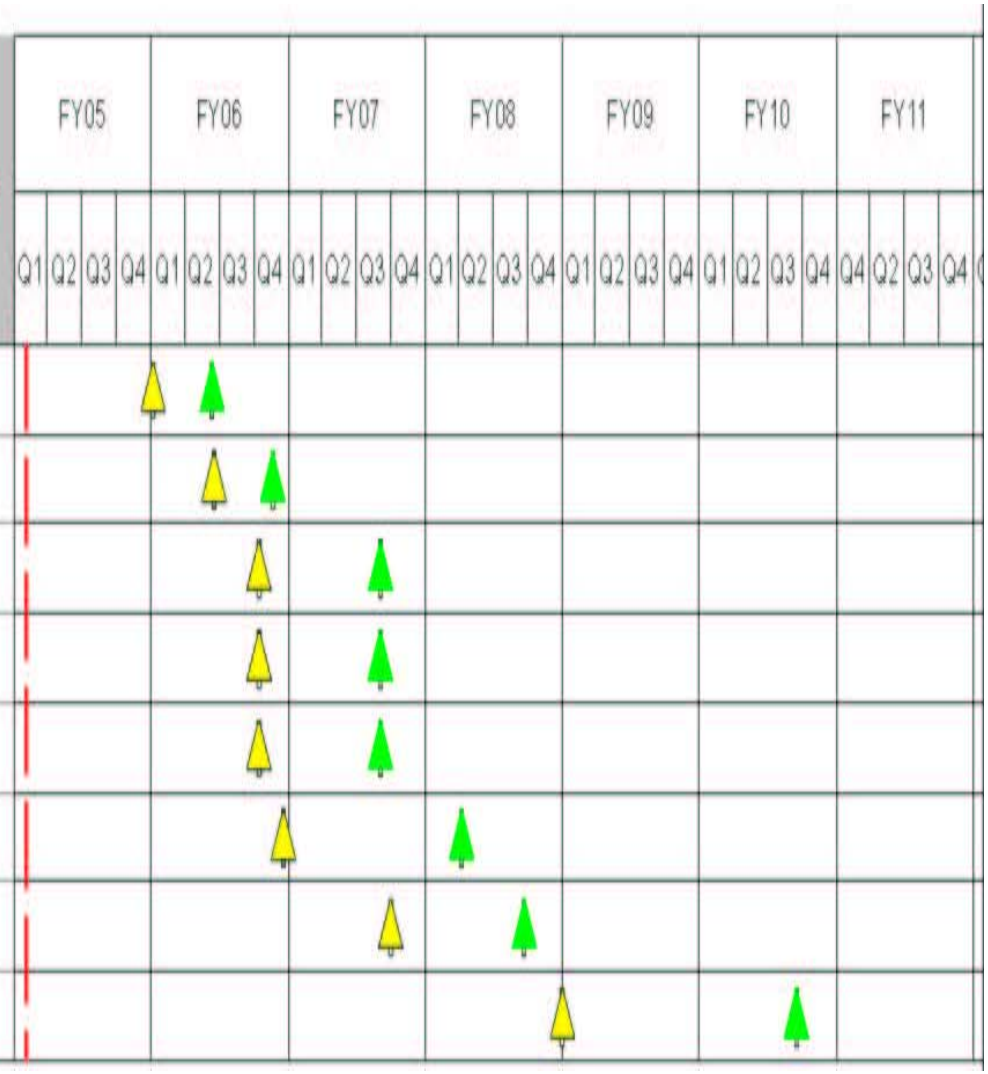
Activity Desc.	Early Finish	Baseline - PMB
T3M-34: PO awarded: Long-term prod ASDQ ICs	03Oct05	08Mar06
T3M-35: 20% of prod front-end boards completed	15Mar06	15Aug06
T2M-12: Start of Octant production	12Jul06	01Jun07
T3M-31: End of Octant pre-production	12Jul06	31May07
T3M-33: Start Octant Production	12Jul06	01Jun07
T3M-32: 15% of production planks completed	14Sep06	04Jan08
T3M-36: 1st Muon station ready for installation	29Jun07	17Jun08
T3M-37: Muon Detector Completed	26Sep08	15Jun10