Q1-Q5 Quadrupoles Cold Mass (WBS 2.1.1.1) Fabrication & Test (WBS 2.1.1.4)

Fred Nobrega

Introduction & Overview

WBS 2.1.1.1
WBS 2.1.1.4

- Cold mass design, procurement, fabrication & Contact tooling design & procurement
  - Cold mass design based on LHC IR Q2
  - Design items include yoke, end plate, shell, end dome, bus and contact tooling for shell welding
- Magnet fabrication & test

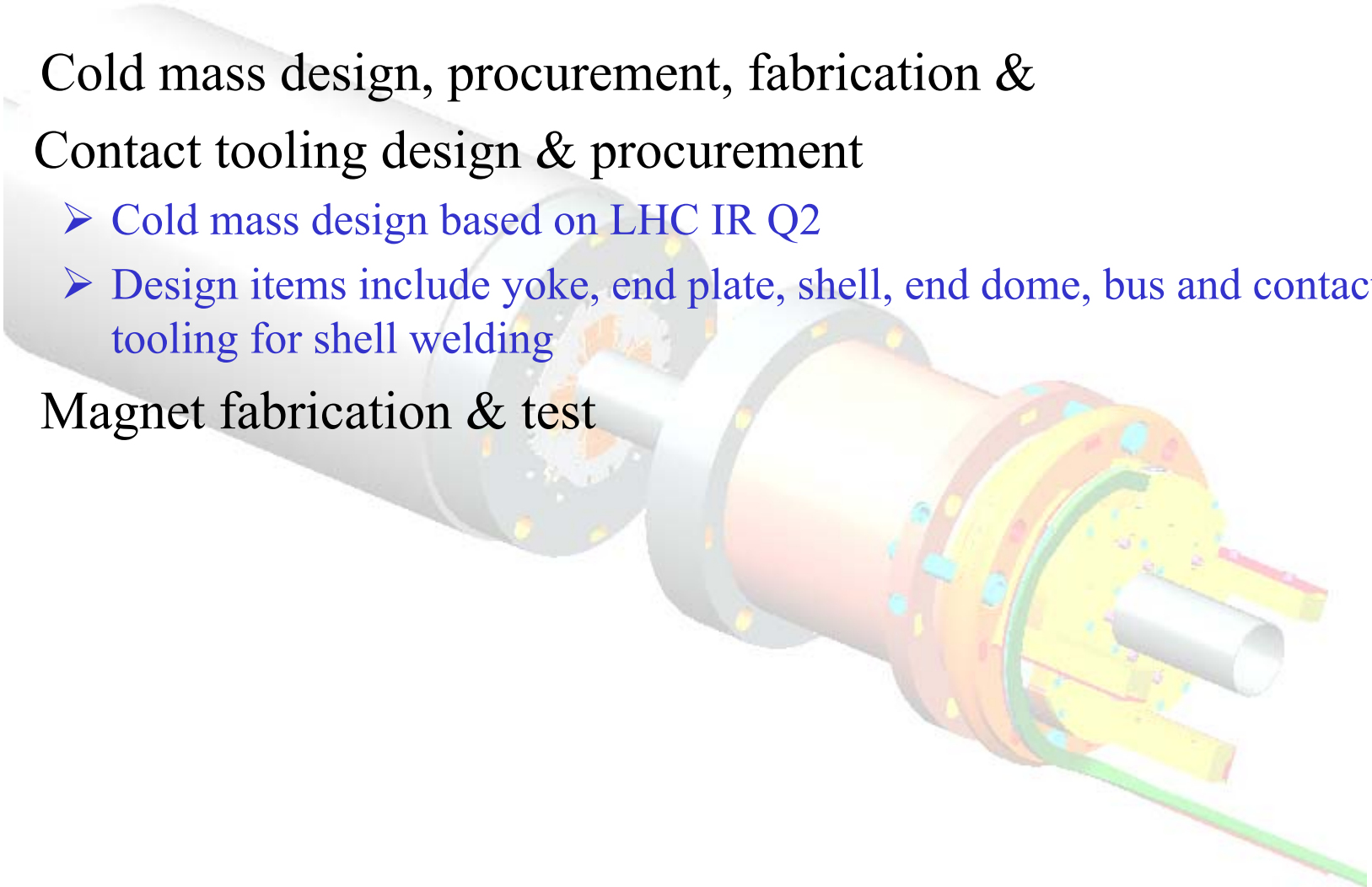

Organization

WBS 2.1.1.1
WBS 2.1.1.4

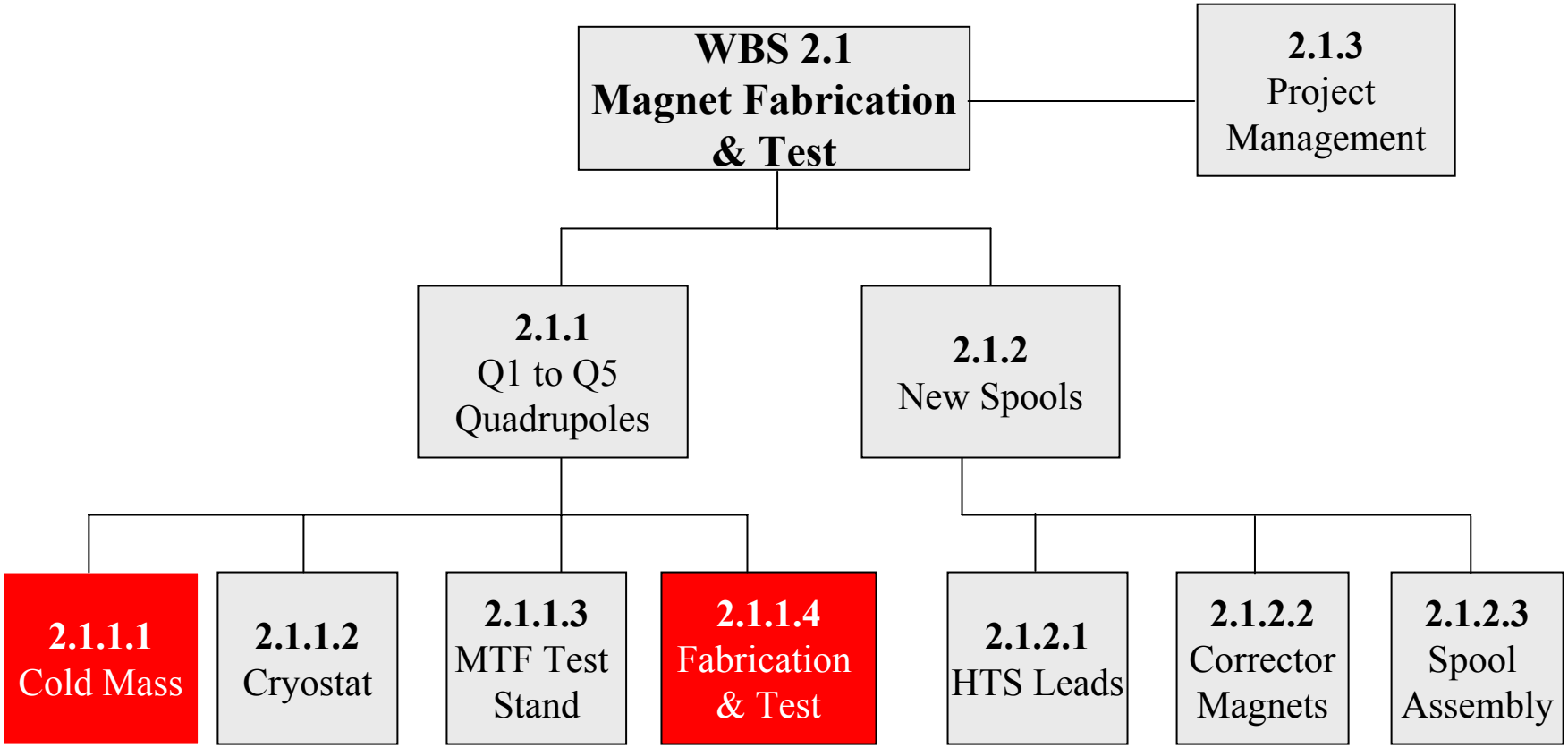

Q1-Q5 Cold Masses

- C0 IR design uses LHC Quadrupole as basis
  - Operate at 4.5K at C0 as opposed to 1.9K in LHC
  - 170T/m operation at C0 as compared to 214T/m
  - Lengths shorter than LHC
  - Collared coil provides all mechanical support—quench performance understood
  - Coil bore 70mm, beam tube OD 66.7 mm
  - C0 Ramp Rate higher than LHC—155A/sec compared with 10A/sec

C0 IR Quadrupole Requirements

Magnet	Nominal Gradient	Magnetic Length	Magnetic Center	Mechanical Slot Length
	(T/m)	(m)	(m from IP)	(m)
Q1	169.2	2.41	14.263	3.520
Q2	165.4	4.43	18.749	5.476
Q3	169.2	2.41	24.661	3.520
Q4	170.0	2.01	65.115	2.974
Q5	170.0	1.37	86.911	2.441

(4.5K Operating Temperature)

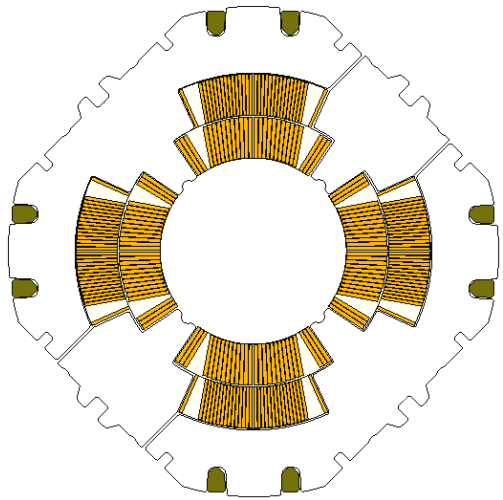

LHC Quadrupole Collared Coil Cross Section

Q1-Q5 Cold Masses

- Quench current vs ramp rate data at 4.5 K

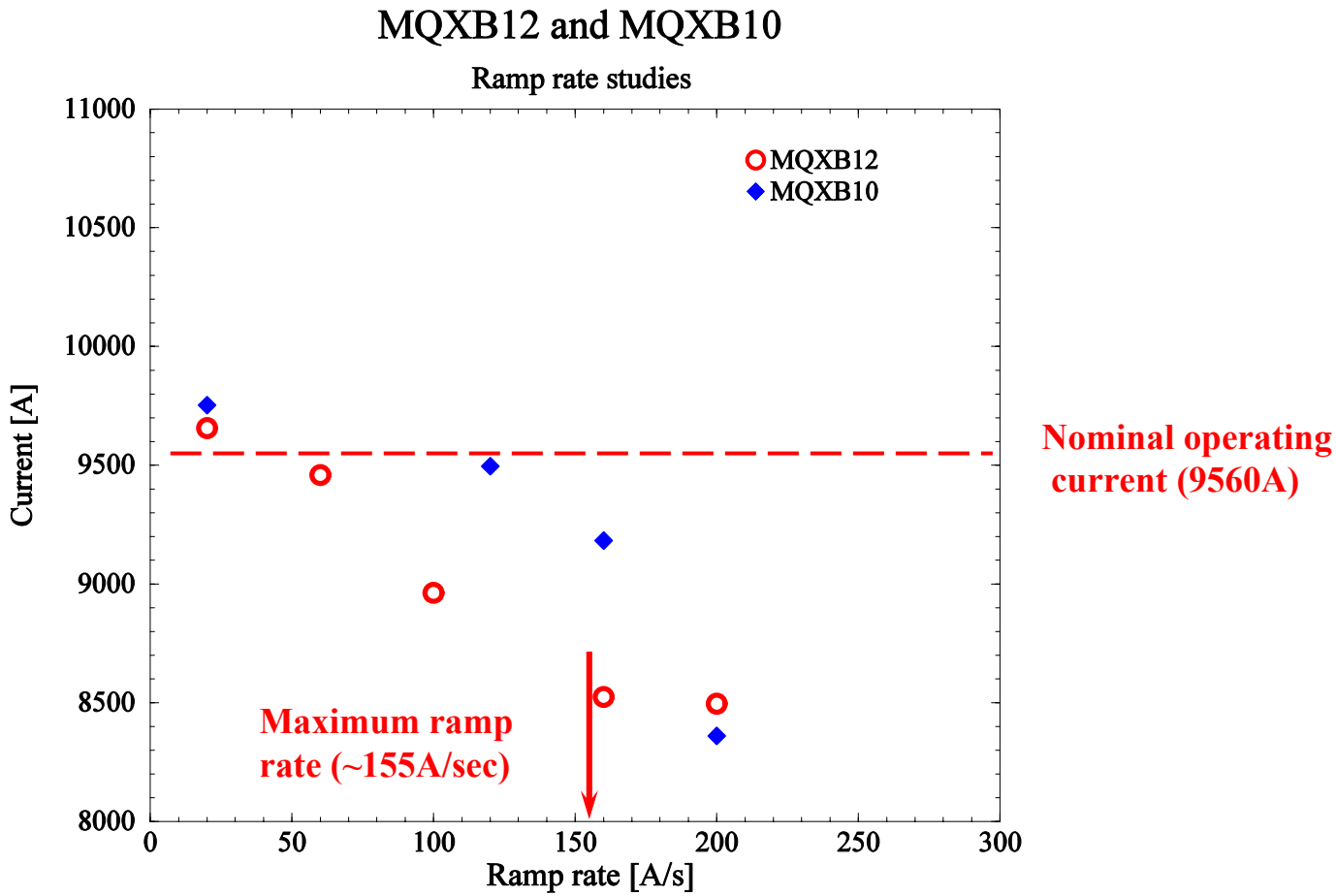

Q1-Q5 Cold Masses

- Quench limits are understood and experimentally proven through LHC program
- Harmonics agree well with expectation, modestly better than B0/D0 LBQs
- Transfer function agreement with calculation good

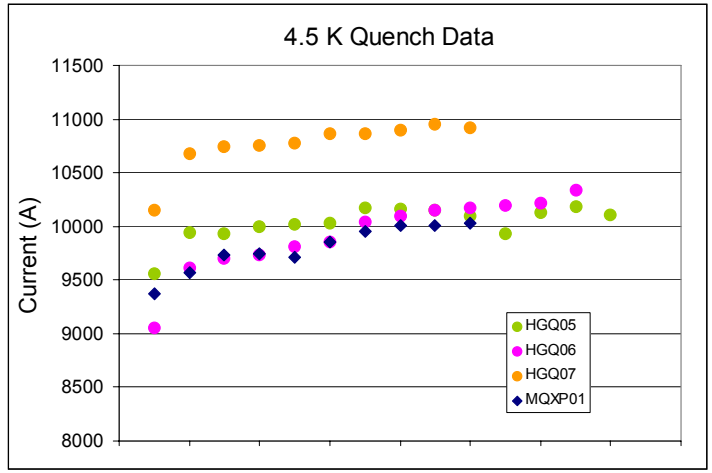

Quench Performance at 4.5K—170T/m = 9560A

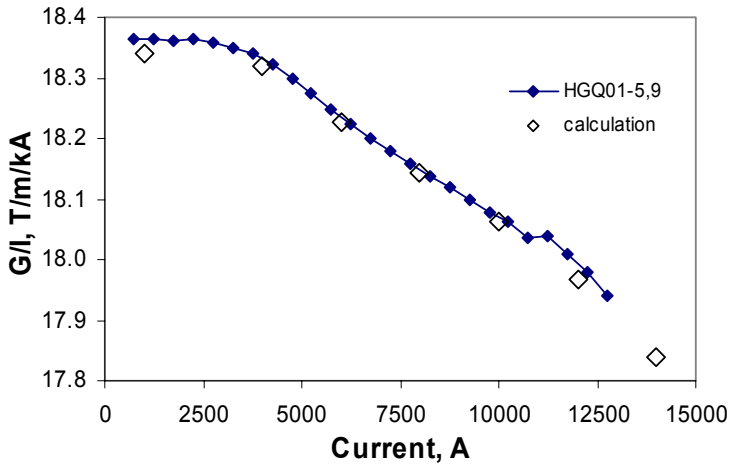

Measured and Calculated Transfer Function Comparison

Average and standard deviations of the measured body harmonics at 11.9kA for the first 6 production LHC quadrupoles

Harmonic Coefficient	Mean	RMS
b_3	0.31	0.47
a_3	-0.57	0.65
b_4	0.02	0.48
a_4	0.30	0.39
b_5	-0.03	0.13
a_5	-0.38	0.18
b_6	-0.02	0.45
a_6	-0.04	0.11
b_7	-0.01	0.03
a_7	0.01	0.03
b_8	0.00	0.02
a_8	0.01	0.03
b_9	0.03	0.01
a_9	-0.02	0.03
b_{10}	0.00	0.02
a_{10}	-0.03	0.02

Q1-Q5 Cold Masses

- Design changes from LHC IRQ:
  - Quadrant splice assembly
  - Yoke diameter and features
  - End plate & end domes
  - Bus & expansion loop
  - Shell thickness, 6.35 mm
  - Beam tube, 1.65 mm wall

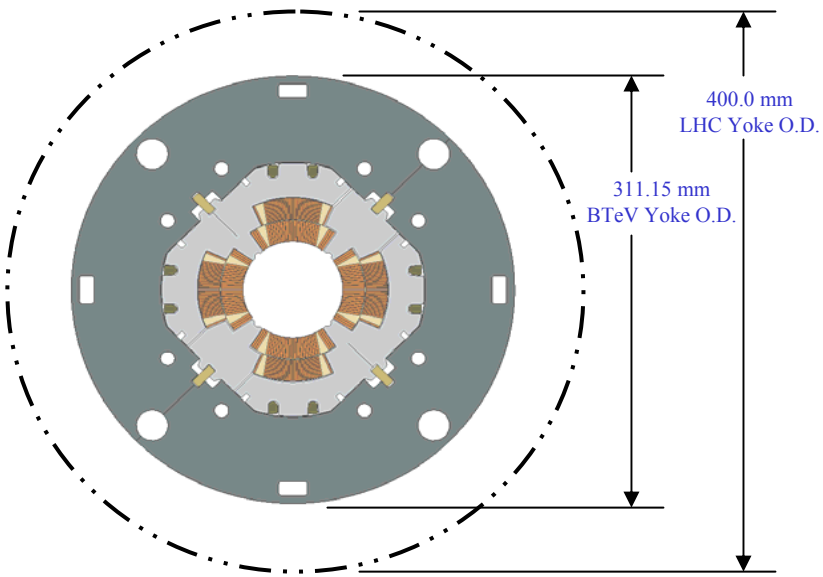

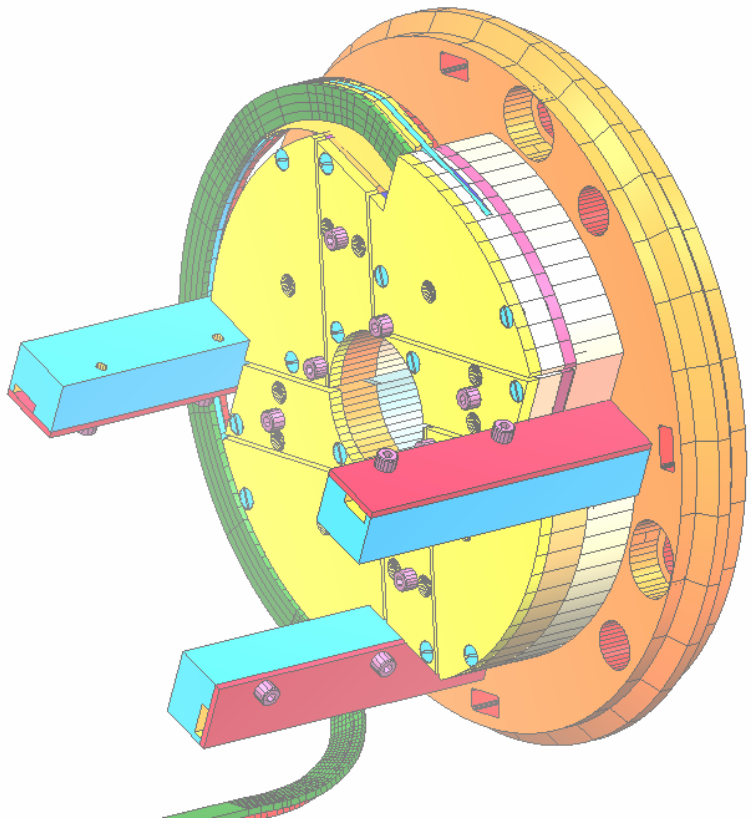

Quadrant Splice Assembly Layout

Q1-Q5 Cold Masses

- Optimizations / Areas for Further Study
  - Bus & expansion loop
  - Thermal analysis
  - Reduction in yoke OD, and cryostat OD to fit in Tevatron
    - Complete electromagnetic calculations w/ final yoke
    - Modification of Quadrant Splice Design
    - Change in expansion loop design
  - Finalizing magnetic / mechanical lengths
  - Finalizing cryostat interfaces

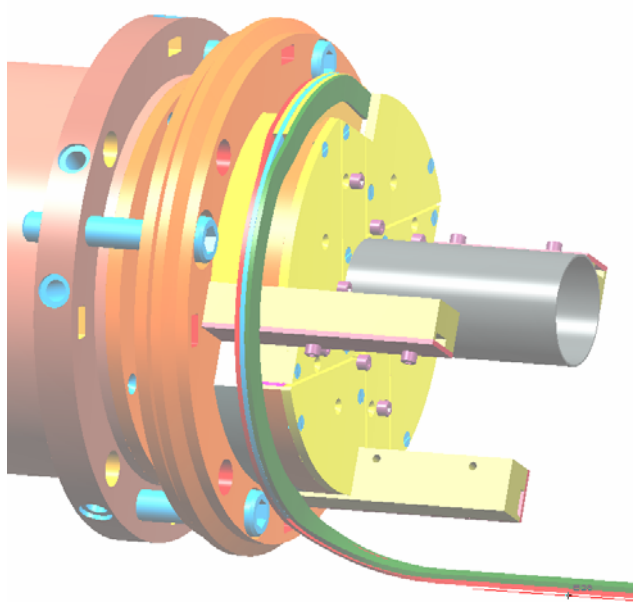

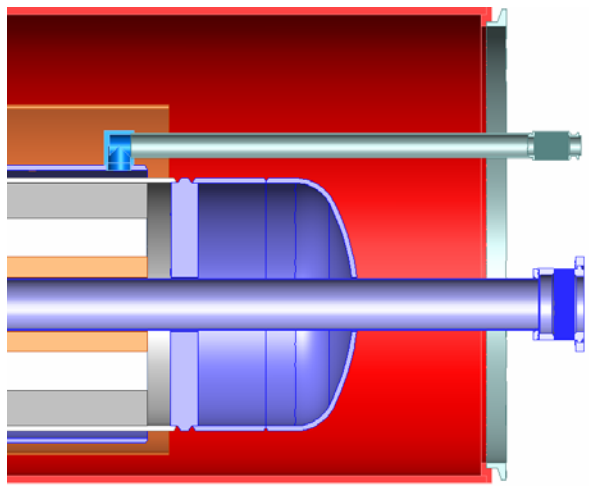

Q1-Q5 Cold Masses

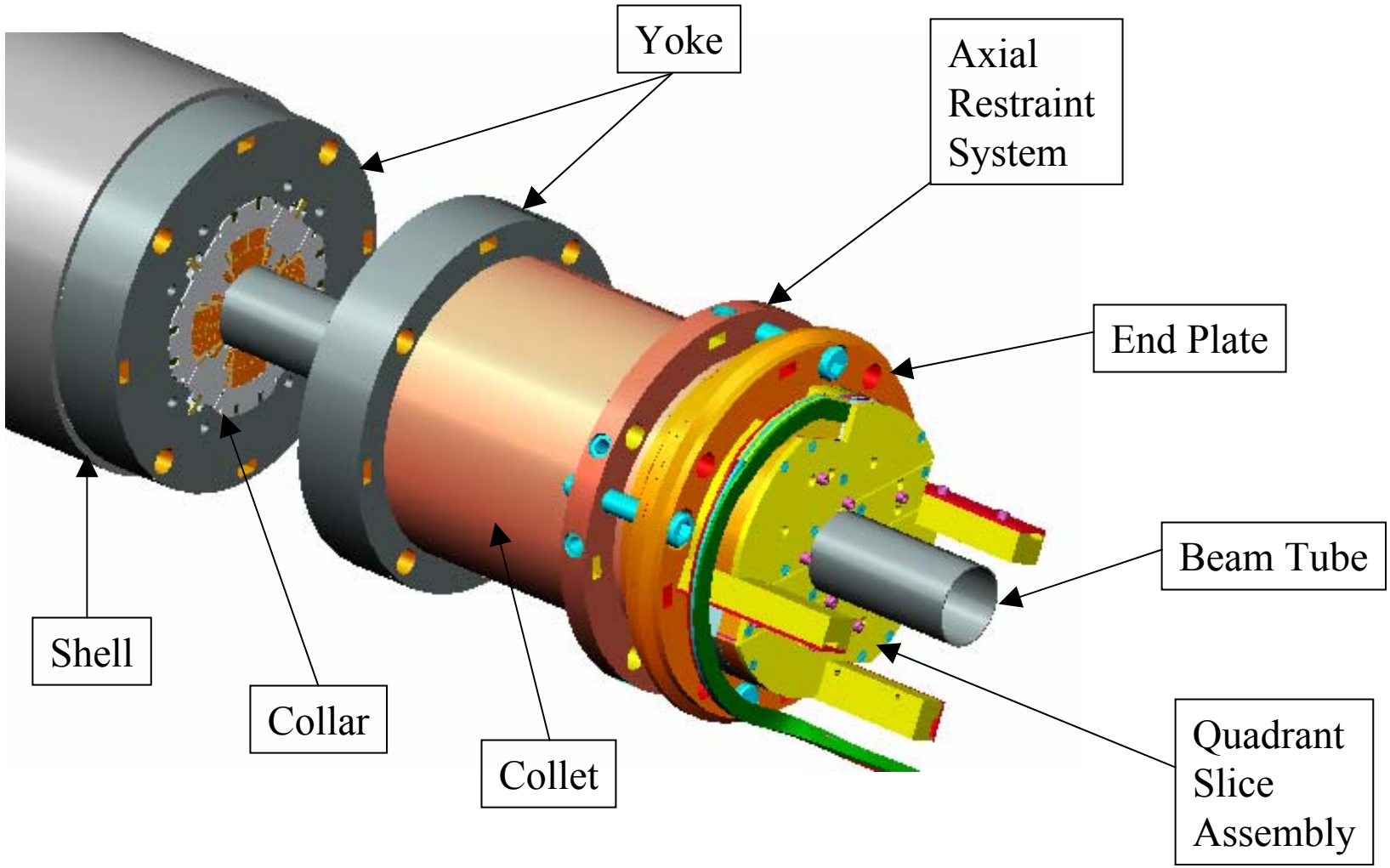

BTeV Quadrupole Cold Mass, Lead End

Cost Drivers

WBS 2.1.1.1
WBS 2.1.1.4

- Cable $716,700
- Test (He) $100,000
- End parts $98,350
- Collar Steel $94,480
- Yoke (iron + die) $54,300
- End part raw material (tubes) $20,900
- Collet raw material (tubes) $19,500

Note:
- G&A not included
- Ref. BOE

Base cost (WBS 2.1.1.1 & 2.1.1.4): $6.3M

(Material: $2.1M, Labor: $4.2M)

Cold Mass Schedule

WBS 2.1.1.1
WBS 2.1.1.4

Activity ID	Activity Description	Original Duration	Early Start	Early Finish
1	New magnet fabrication and test	1347d	02Feb04	01Jun09
1.1	LHC-type Quadrupoles	1260d	02Feb04	28Jan09
1.1.1	COLD MASS	651d	02Feb04	23Aug06
1.1.1.1	Cold Mass Component Design	480d	02Feb04	23Dec05
1.1.1.2	Cold Mass Tooling Design	380d	01Oct04	03Apr06
1.1.1.3	Cold Mass Component Procurement	390d	04Oct04	18Apr06
1.1.1.4	Cold Mass Tooling Procurement	280d	21Jul05	23Aug06
1.1.2	Q1 through Q5 CRYOSTAT	560d	01Mar04	12May06
1.1.2.1	Design & Detailing	380d	01Mar04	30Aug05
1.1.2.2	Cryostat Procurement	320d	14Feb05	12May06
1.1.3	MTF TEST STAND	771d	02Feb04	15Feb07
1.1.4	Q1 through Q5 PRODUCTION	680d	15May06	28Jan09
1.1.4.1	174-1	211d	15May06	15Mar07
1.1.4.2	174-2	191d	12Jul06	12Apr07
1.1.4.3	174-3	171d	07Sep06	10May07
1.1.4.4	97-1	151d	02Nov06	08Jun07
1.1.4.5	97-2	120d	03Jan07	21Jun07
1.1.4.6	97-3	120d	01Mar07	17Aug07
1.1.4.7	97-4	120d	26Apr07	15Oct07
1.1.4.8	97-5	120d	22Jun07	12Dec07
1.1.4.9	97-6	120d	20Aug07	13Feb08
1.1.4.10	75-1	120d	16Oct07	09Apr08
1.1.4.11	75-2	120d	13Dec07	05Jun08
1.1.4.12	75-3	120d	14Feb08	01Aug08
1.1.4.13	54-1	120d	10Apr08	29Sep08
1.1.4.14	54-2	120d	06Jun08	26Nov08
1.1.4.15	54-3	120d	04Aug08	28Jan09
1.1.4.16	Production Oversight in ICB	680d	**15May06**	**28Jan09**

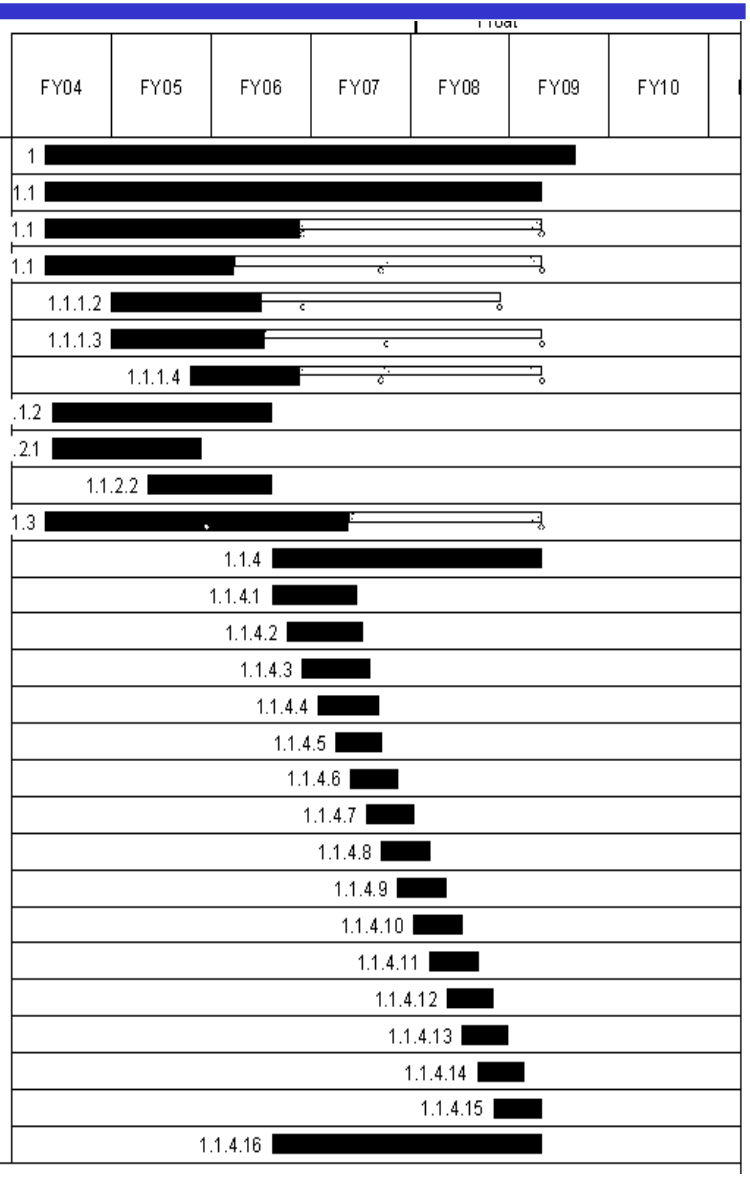

Cold Mass Cost

WBS 2.1.1.1
WBS 2.1.1.4

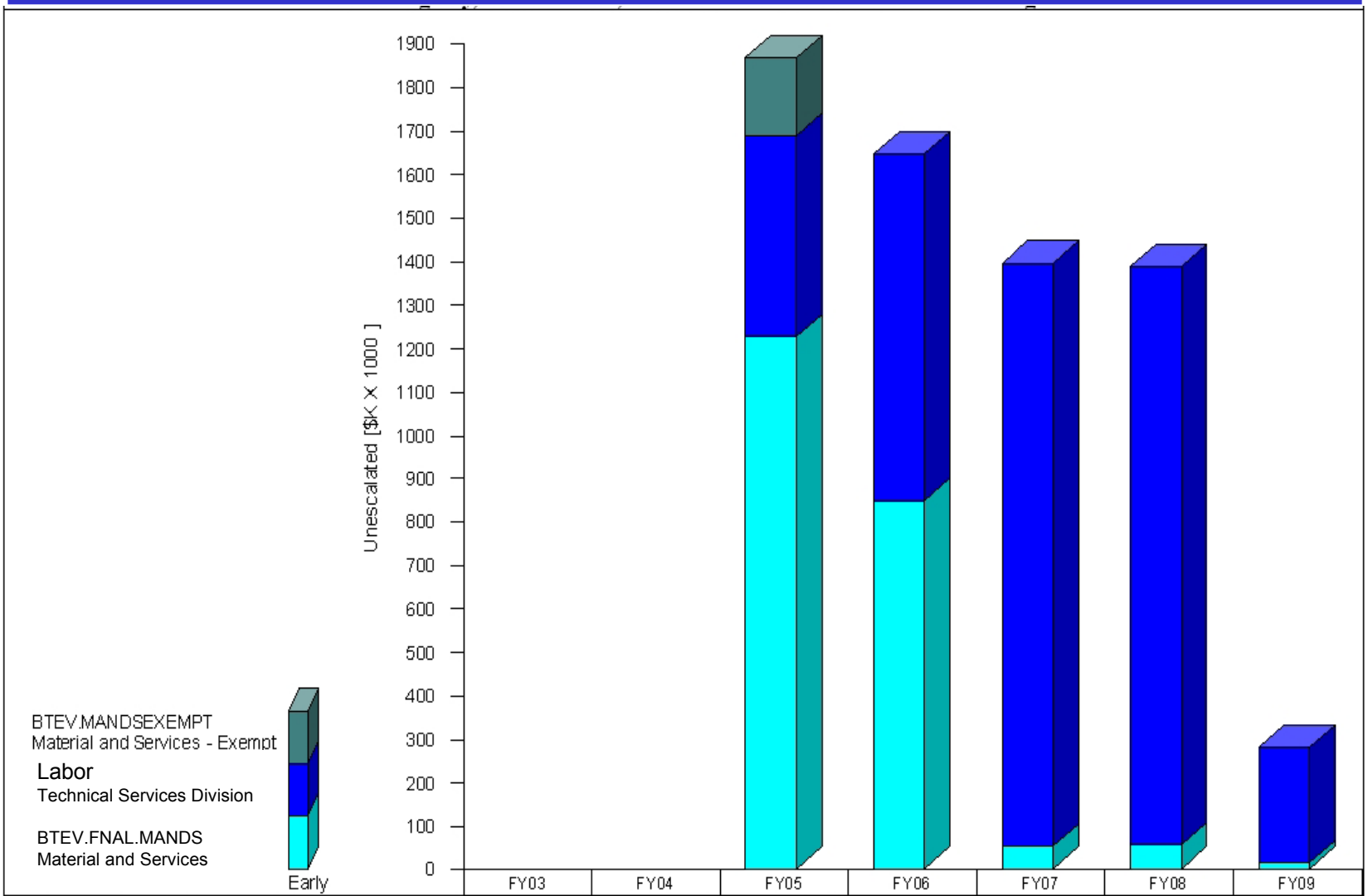

	FY03	FY04	FY05	FY06	FY07	FY08	FY09
BTEV.FNAL.MANDS : Material and Services	0	0	1225	847	52	53	12
BTEV.FNAL.TS : Technical Services Division	0	0	463	799	1342	1334	268
BTEV.MANDSEXEMPT : Material and Services - Exemp	0	0	179	0	0	0	0

Cold Mass FTE

WBS 2.1.1.1
WBS 2.1.1.4

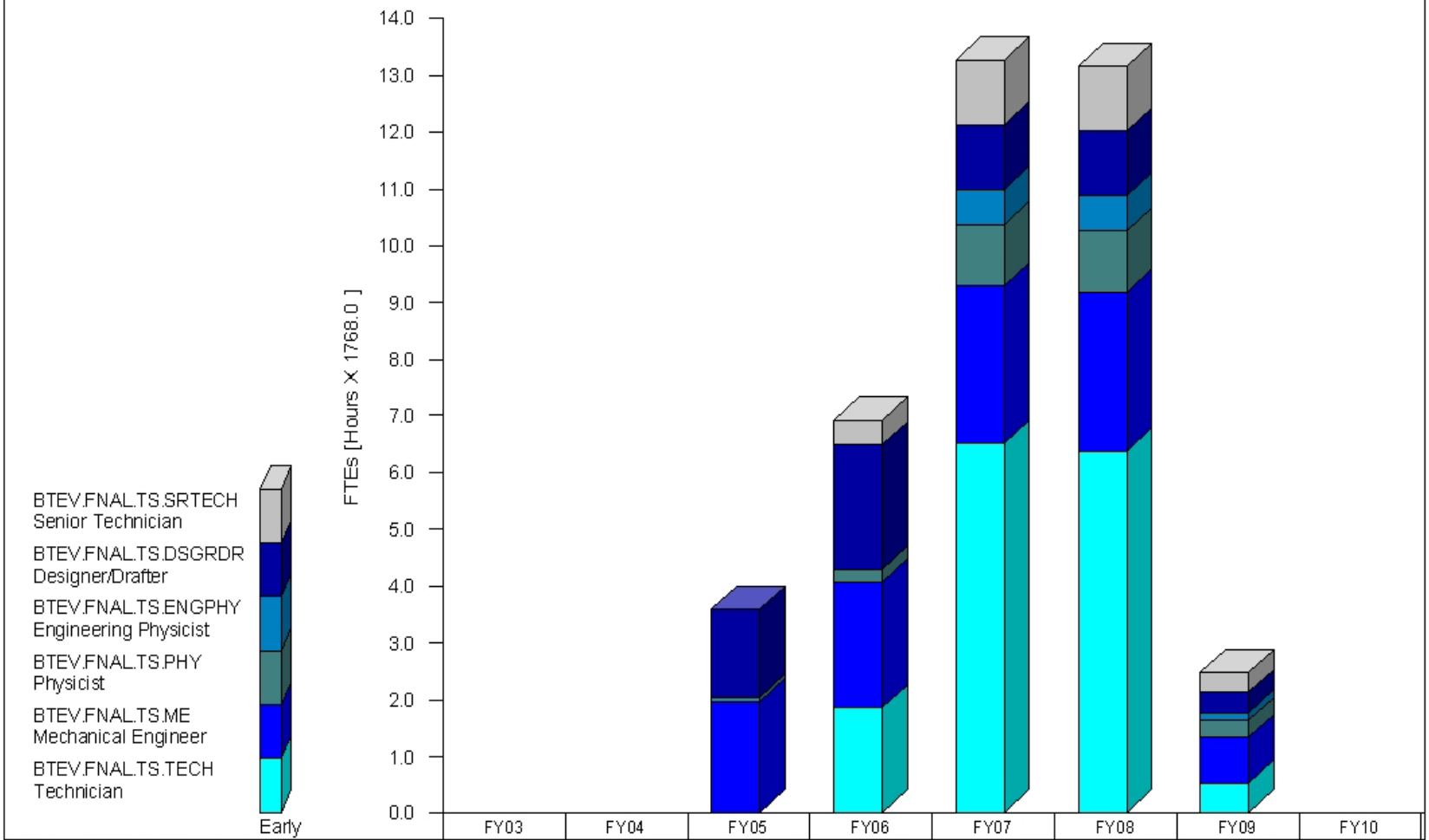

	FY03	FY04	FY05	FY06	FY07	FY08	FY09	FY10
BTEV.FNAL.TS.TECH : Technician	0.0	0.0	0.0	1.8	6.5	6.4	0.5	0.0
BTEV.FNAL.TS.ME : Mechanical Engineer	0.0	0.0	1.9	2.2	2.8	2.8	0.8	0.0
BTEV.FNAL.TS.PHY : Physicist	0.0	0.0	0.1	0.2	1.1	1.1	0.3	0.0
BTEV.FNAL.TS.ENGPHY : Engineering Physicist	0.0	0.0	0.0	0.0	0.6	0.6	0.1	0.0
BTEV.FNAL.TS.DSGRDR : Designer/Drafter	0.0	0.0	1.6	2.2	1.1	1.1	0.4	0.0
BTEV.FNAL.TS.SRTECH : Senior Technician	0.0	0.0	0.0	0.4	1.1	1.1	0.4	0.0

Cold Mass Design Procure't Schedule

WBS 2.1.1.1
WBS 2.1.1.4

Activity ID	Activity Description	Original Duration	Early Start	Early Finish
1	New magnet fabrication and test	1347d	02Feb04	01Jun09
1.1	LHC-type Quadrupoles	1260d	02Feb04	28Jan09
1.1.1	COLD MASS	651d	02Feb04	23Aug06
1.1.1.1	Cold Mass Component Design	480d	02Feb04	23Dec05
1.1.1.1.1	Quadrant Splice Design & mock-up	40d	24May04	20Jul04
1.1.1.1.2	Bus Design & mock-up	30d	21Jul04	31Aug04
1.1.1.1.3	Expansion loop Design & mock-up	30d	01Sep04	13Oct04
1.1.1.1.4	Magnetic Analysis	20d	14Oct04	10Nov04
1.1.1.1.5	Thermal Analysis	20d	14Oct04	10Nov04
1.1.1.1.6	Yoke	40d	11Nov04	13Jan05
1.1.1.1.7	Axial Restraint Design	40d	14Jan05	11Mar05
1.1.1.1.8	Skin	40d	14Mar05	06May05
1.1.1.1.9	End-plate	60d	09May05	02Aug05
1.1.1.1.10	End-dome	60d	03Aug05	26Oct05
1.1.1.1.11	Beam-tube	40d	27Oct05	23Dec05
1.1.1.1.12	Quench Heater Design (LHC baseline)	100d	02Feb04	21Jun04
1.1.1.2	Cold Mass Tooling Design	380d	01Oct04	03Apr06
1.1.1.2.1	Winding Station Modifications	100d	01Oct04	28Feb05
1.1.1.2.2	4 Mandrels and Assocaitive Tooling	100d	01Mar05	20Jul05
1.1.1.2.3	Coil / Mandrel Lifting Fixture (2)	60d	21Jul05	13Oct05
1.1.1.2.4	Yoke handling fixture	40d	14Oct05	12Dec05
1.1.1.2.5	Shell weld contact tooling	80d	13Dec05	03Apr06
1.1.1.3	Cold Mass Component Procurement	390d	04Oct04	18Apr06
1.1.1.3.1	Superconductor for Base Quadrupole Magnets	200d	04Oct04	21Jul05
1.1.1.3.2	Superconductor for Base Magnets (EXEMPT)	200d	04Oct04	21Jul05
1.1.1.3.4	Steel for Collar Laminations	120d	22Jul05	10Jan06
1.1.1.3.6	All other Components for half of total magnets	250d	04Oct04	30Sep05
1.1.1.3.8	All other Components for remaining half	140d	03Oct05	18Apr06
1.1.1.4	Cold Mass Tooling Procurement	280d	21Jul05	23Aug06
1.1.1.4.1	Cold Mass Tooling Components	280d	21Jul05	23Aug06
1.1.1.4.2	Cold Mass Tooling Procurement oversight	100d	04Apr06	23Aug06

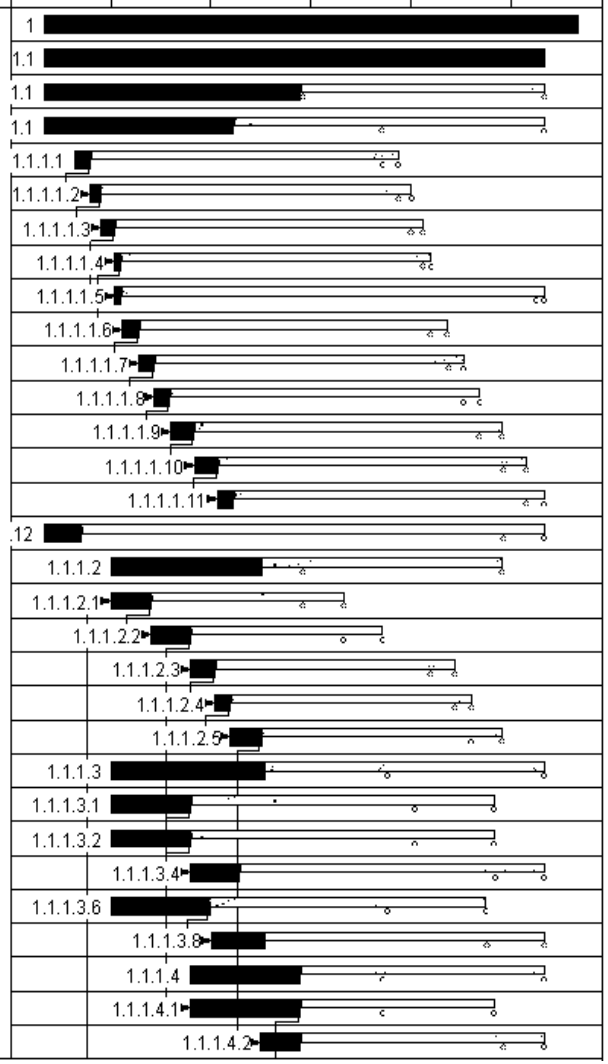

Cold Mass Fabrication & Test Schedule

WBS 2.1.1.1
WBS 2.1.1.4

Activity ID	Activity Description	Original Duration	Early Start	Early Finish
1.1.3.3	Installation	80d	**28Jun06**	**19Oct06**
1.1.3.4	Commission	80d	**20Oct06**	**15Feb07**
1.1.4	Q1 through Q5 PRODUCTION	680d	15May06	28Jan09
1.1.4.1	174-1	211d	15May06	15Mar07
1.1.4.1.1	Coils	40d	**15May06**	**11Jul06**
1.1.4.1.2	Coils Assembly	20d	**12Jul06**	**08Aug06**
1.1.4.1.3	Final Assembly/Cryostat	40d	**24Aug06**	**19Oct06**
1.1.4.1.4	Test	20d	**16Feb07**	**15Mar07**
1.1.4.2	174-2	191d	12Jul06	12Apr07
1.1.4.2.1	Coils	40d	**12Jul06**	**06Sep06**
1.1.4.2.2	Coils Assembly	20d	**07Sep06**	**04Oct06**
1.1.4.2.3	Final Assembly/Cryostat	40d	**05Oct06**	**01Dec06**
1.1.4.2.4	Test	20d	**16Mar07**	**12Apr07**
1.1.4.4	97-1	151d	02Nov06	08Jun07
1.1.4.4.1	Coils	40d	**02Nov06**	**02Jan07**
1.1.4.4.2	Coils Assembly	20d	**03Jan07**	**31Jan07**
1.1.4.4.3	Final Assembly/Cryostat	40d	**01Feb07**	**28Mar07**
1.1.4.4.4	Test	20d	**11May07**	**08Jun07**
1.1.4.5	97-2	120d	03Jan07	21Jun07
1.1.4.5.1	Coils	40d	**03Jan07**	**28Feb07**
1.1.4.5.2	Coils Assembly	20d	**01Mar07**	**28Mar07**
1.1.4.5.3	Final Assembly/Cryostat	40d	**29Mar07**	**23May07**
1.1.4.5.4	Test	20d	**24May07**	**21Jun07**
1.1.4.7	97-4	120d	26Apr07	15Oct07
1.1.4.8	97-5	120d	22Jun07	12Dec07
1.1.4.10	75-1	120d	16Oct07	09Apr08
1.1.4.11	75-2	120d	13Dec07	05Jun08
1.1.4.13	54-1	120d	10Apr08	29Sep08
1.1.4.14	54-2	120d	06Jun08	26Nov08
1.1.4.16	Production Oversight in ICB	680d	**15May06**	**28Jan09**
1.2	New Spools	1347d	02Feb04	01Jun09

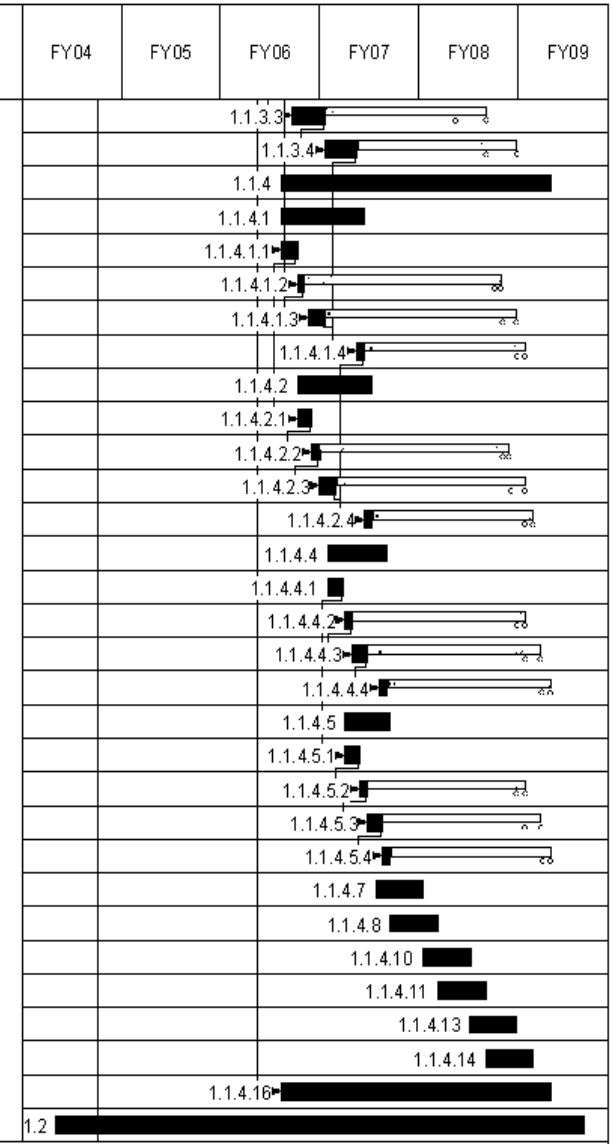

Key Milestones

WBS 2.1.1.1
WBS 2.1.1.4

- Superconductor procurement – October 2004
- Complete cold mass design – December 2005
- Start cold mass production – May 2006

Critical Path Analysis

WBS 2.1.1.1
WBS 2.1.1.4

- Strand & Cable procurement
  - Long lead time item
  - History of unstable cable
- End parts
  - Long lead time item
  - Raw material has fabrication lead time, not off-the-shelf
  - Large number of parts with high part counts

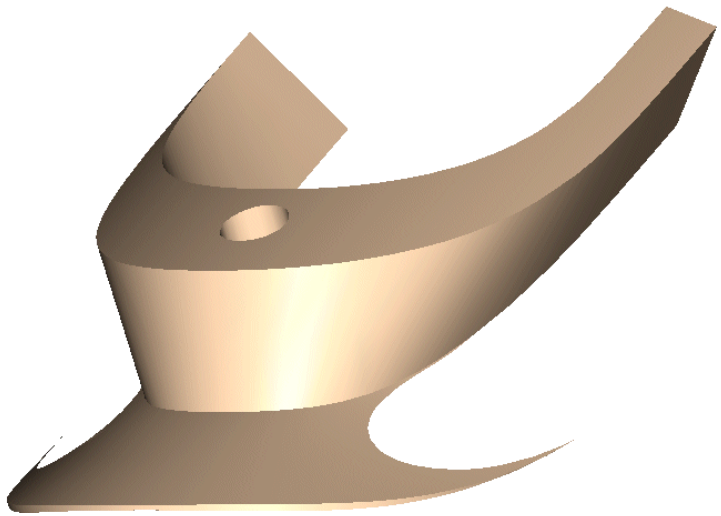

Spacer, End Part

Risk Analysis

WBS 2.1.1.1
WBS 2.1.1.4

Risks	Mitigation
Ramp rate dependence	Adjust Tevatron ramp rate
Cable procurement higher than LHC	Buy more cable
Expansion loops	Build a mockup
New shell welding contact tooling	Weld testing on mockup

Summary

- Cold mass is well understood (technical & cost)
  - 9 LHC model magnets & 15 LHC production magnets built
  - Collared coil assembly unchanged except for length
- Design changes are low risk
  - Shell welding
  - Bus bar & expansion loop
  - Yoke
  - End plate & end dome
- Experienced staff
  - Engineering
  - Procurement
  - Fabrication
  - Test

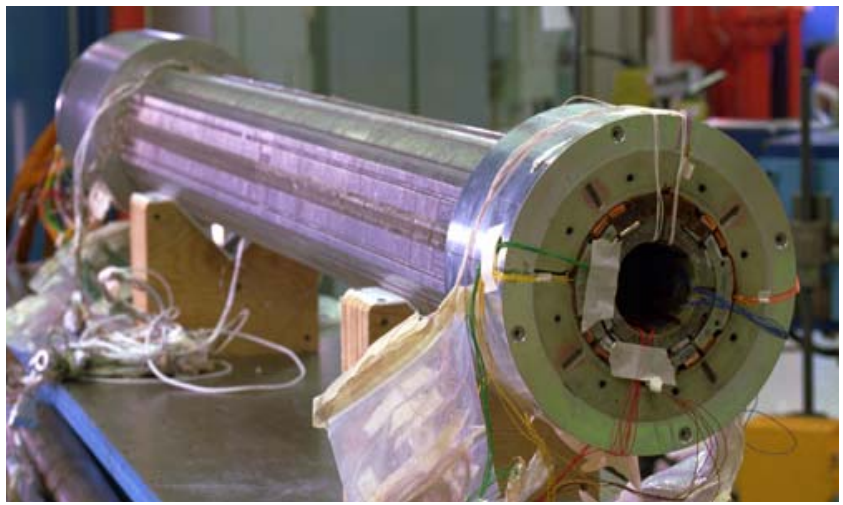

LHC Collared Coil Assembly