Interaction Region Quadrupole Cryostats (WBS 2.1.1.2)

Thomas H. Nicol

Organization (or "You are here") WBS 2.1.1.2

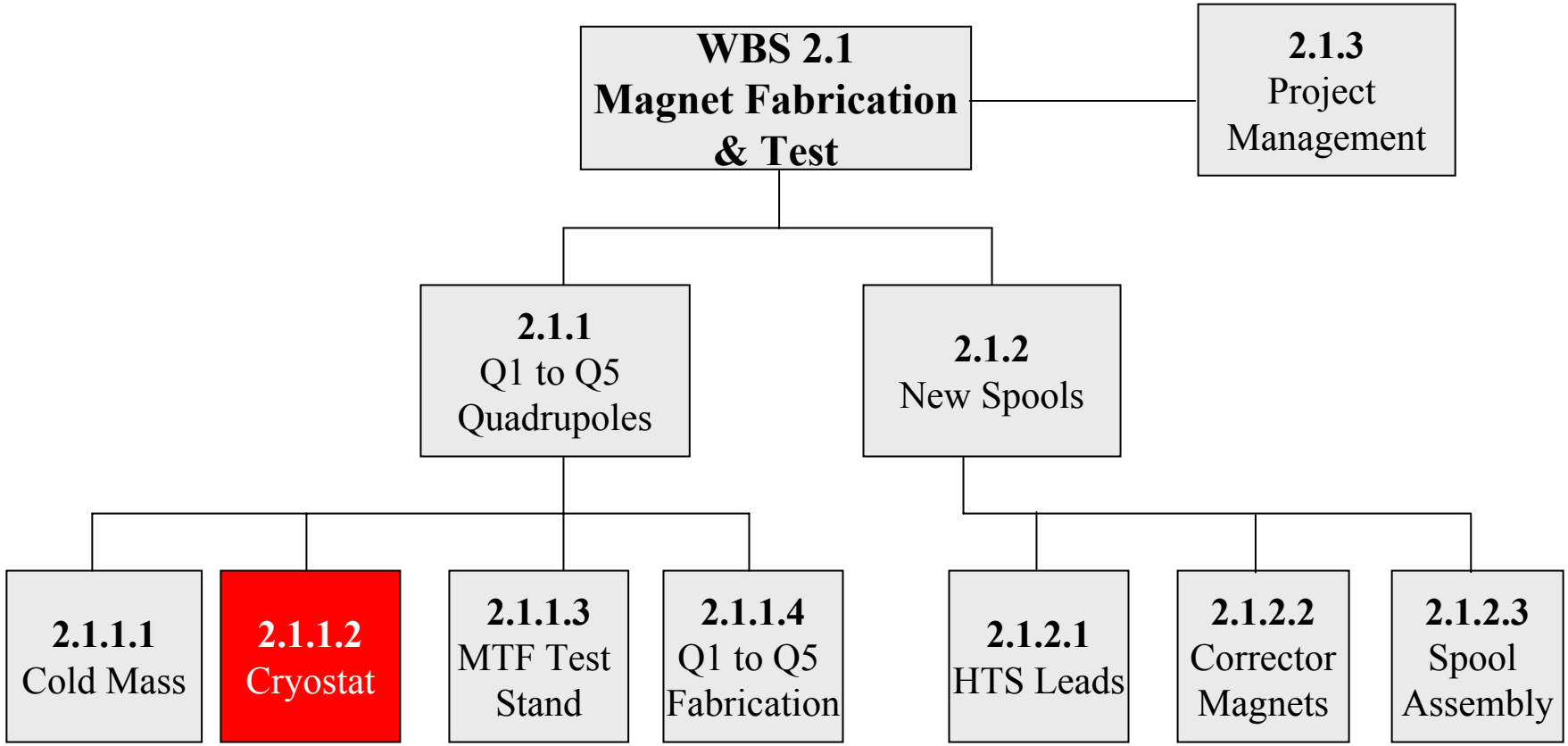

New IR magnets and spools

WBS 2.1.1.2

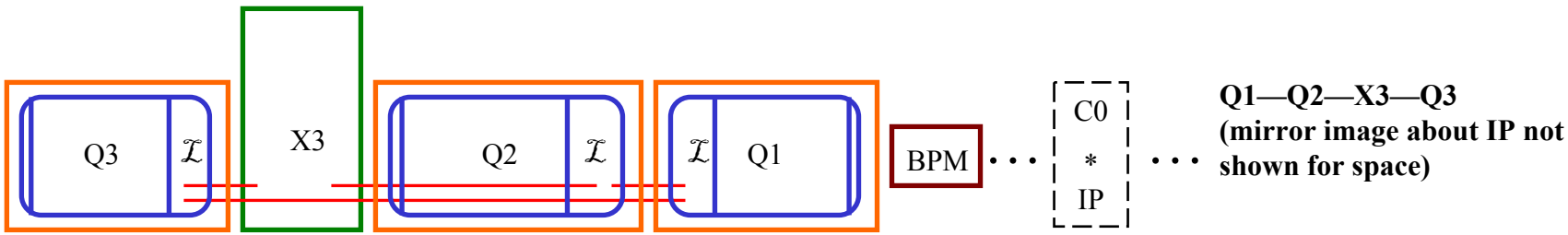

- Two triplets, Q1 through Q3 with one new spool, mirrored across the IP.
- Two new quadrupoles, Q4 and Q5 each with a new spool translated across the IP.

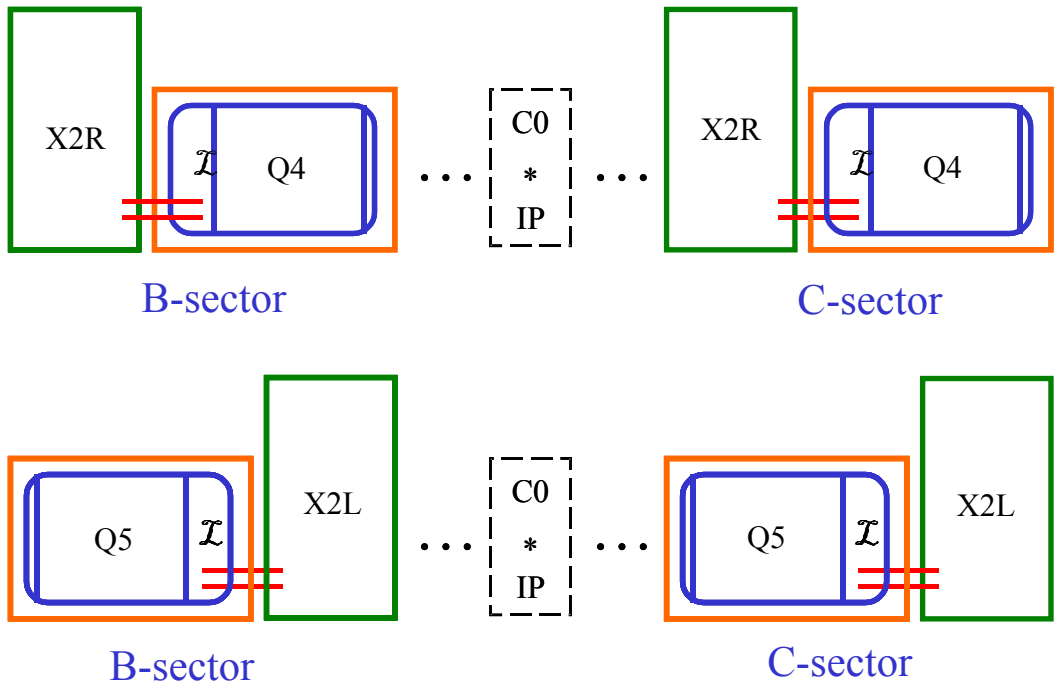

Scope of work

- Design and build two sets of IR quadrupole cryostats for magnets based on LHC collared coil assemblies plus one spare set (3 total).
- Each set consists of 5 quadrupoles, Q1 through Q5, i.e. 15 cryostats total – including 5 spares.

	Warm magnetic length*	Overall coil length*	Interconnect configuration	Actual slot length**
Q1	96.80	100.57	Tevatron cryo plus single phase, two phase, and shield returns.	138.60
Q2	174.00	177.81	Tevatron cryo plus single phase, two phase, and shield returns.	215.60
Q3	96.80	100.57	Tevatron cryo plus single phase, two phase, and shield returns.	138.60
Q4	79.20	83.01	Tevatron (at least one end).	117.10
Q5	54.20	57.94	Tevatron (at least one end).	96.10

*: From Fred Nobrega

**: From lattice

Initial design criteria

- Designed in accordance with the ASME Boiler and Pressure Vessel Code.
- Design maximum allowable working pressure (MAWP):
  - Single phase: 200 psi
  - Two phase: 50 psi
  - LN_2 shield: 100 psi
- Heat load to 4K:
  - 5 W per device (quad, spool, etc.)
- Operating pressures:
  - Single phase: 16 psig
  - Two phase: 5 psig

Triplet layout from lattice

WBS 2.1.1.2

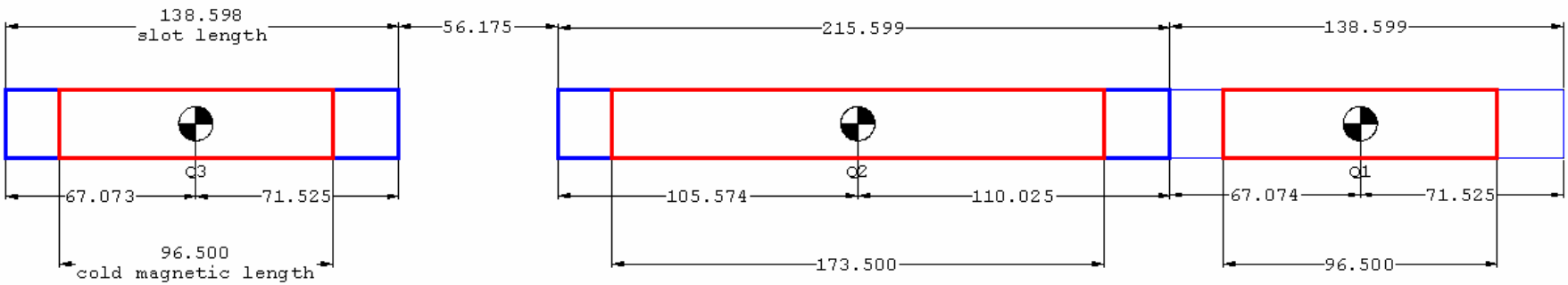

Cryostat cross section

WBS 2.1.1.2

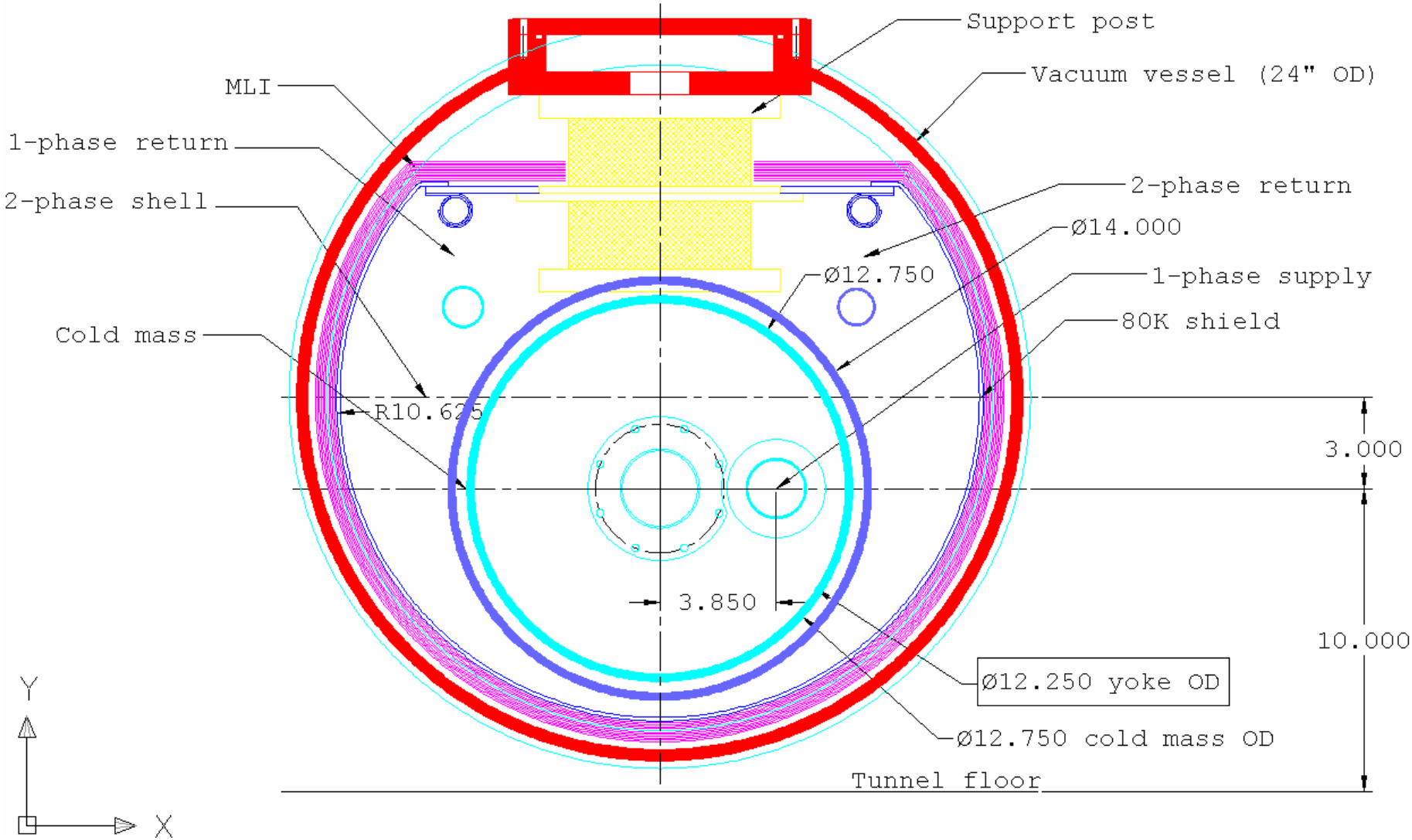

Cryostat solid model cross section WBS 2.1.1.2

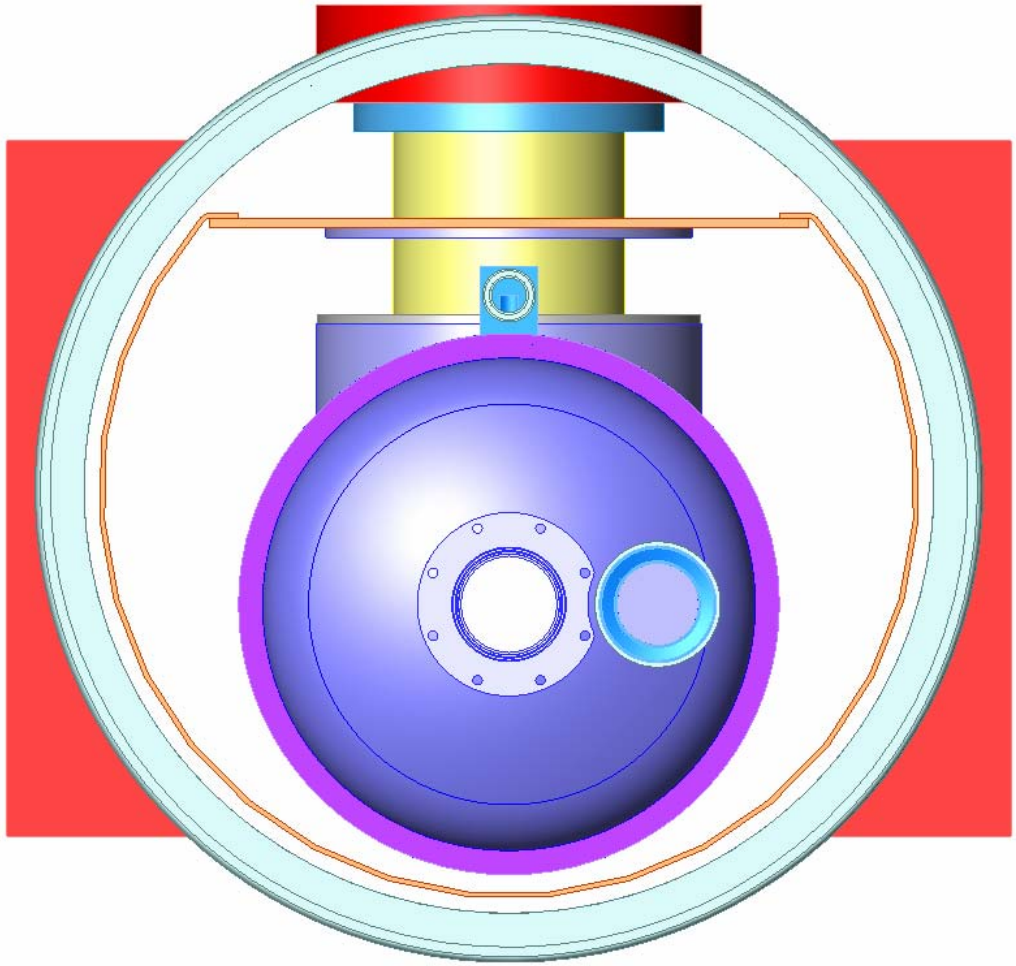

Q2 non-IP end

WBS 2.1.1.2

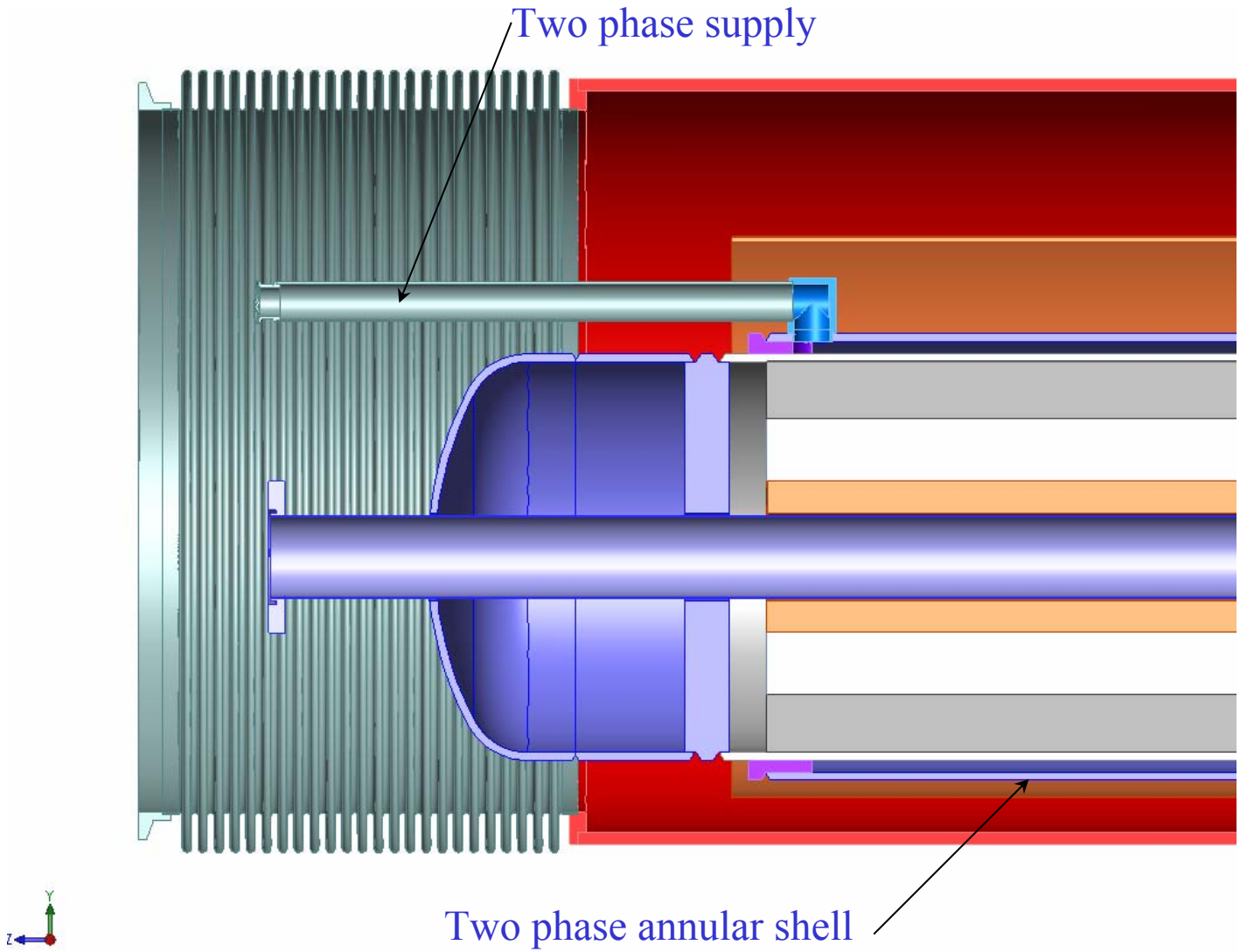

Support post to cold mass interface WBS 2.1.1.2

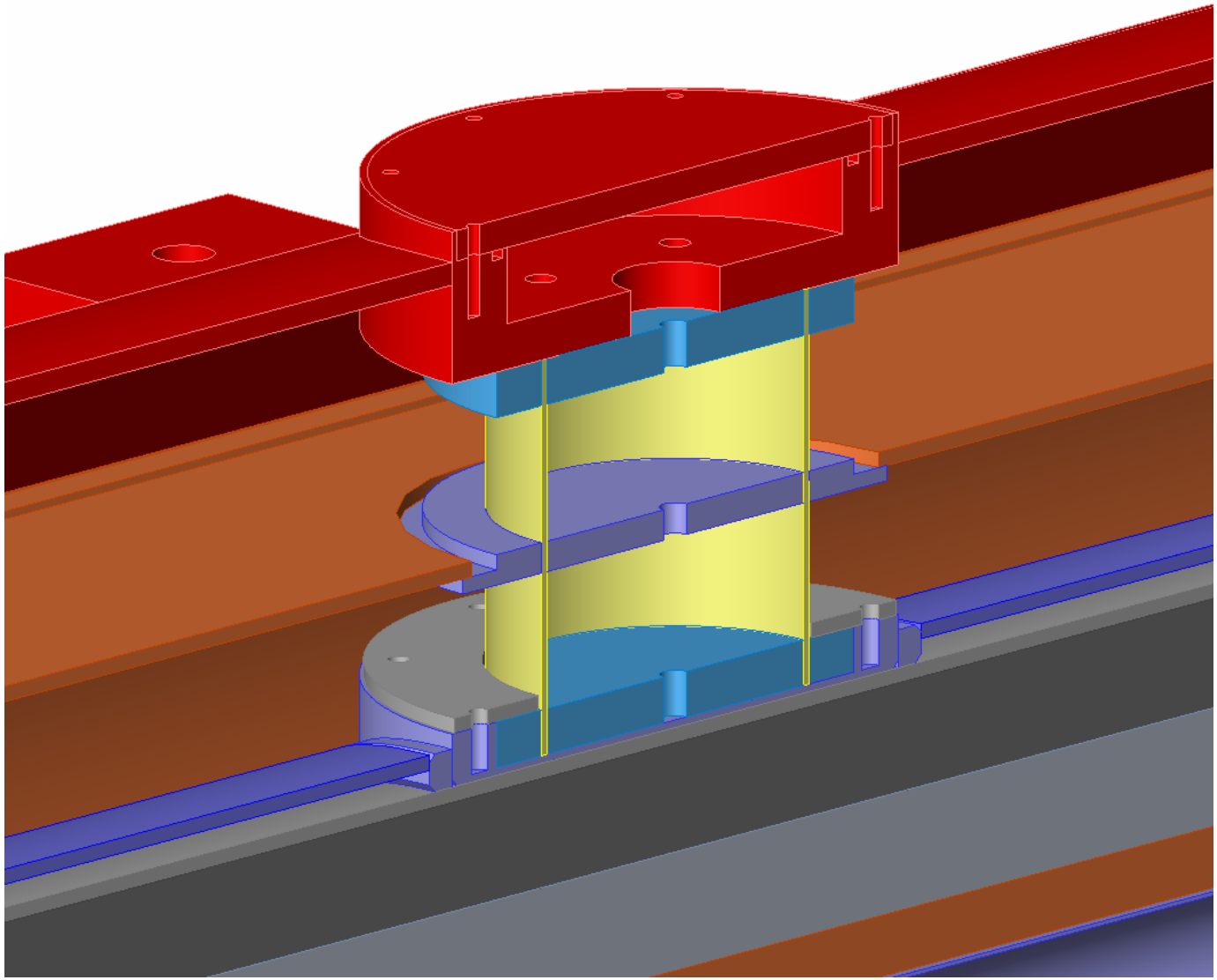

Q2 isometric view

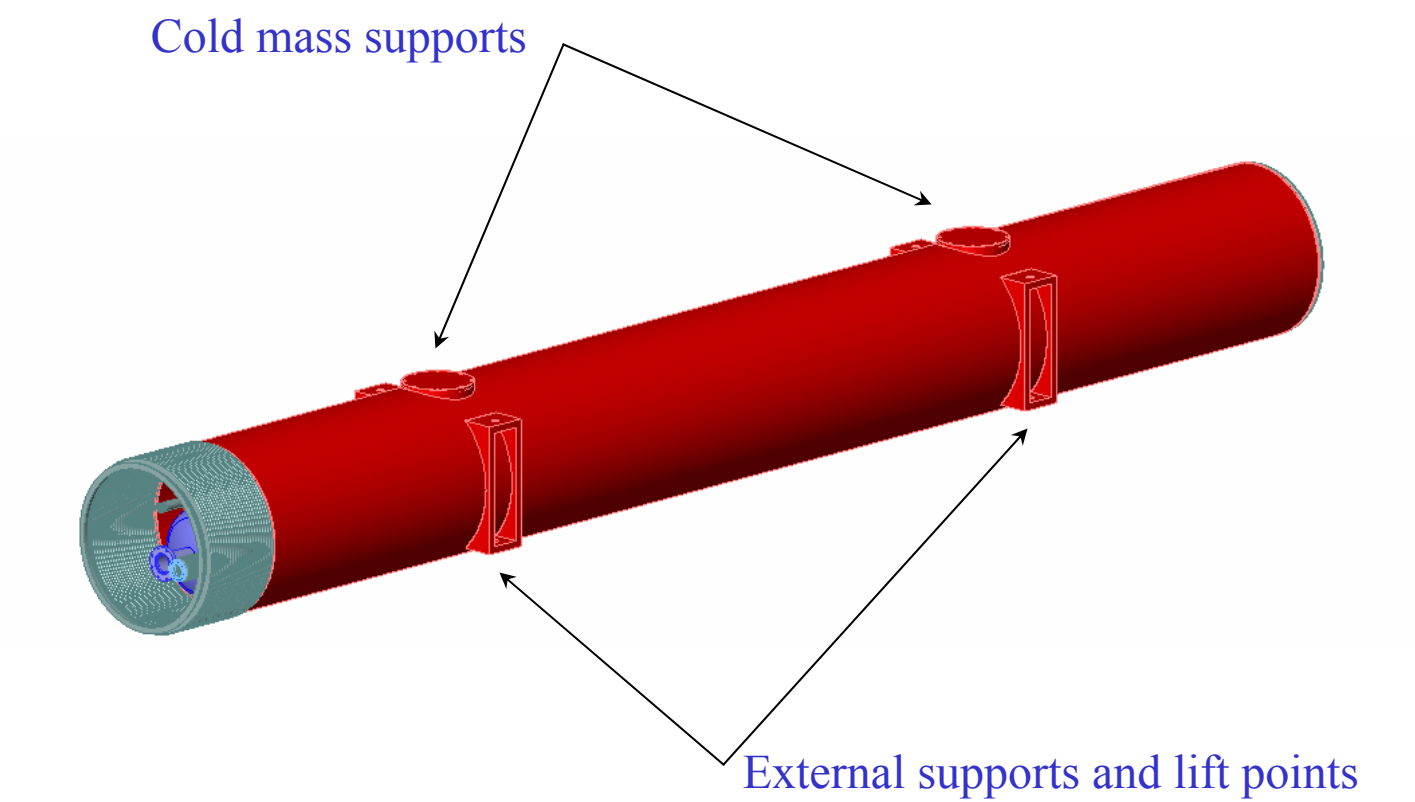

Key milestones

- Complete conceptual design – June 2004.
- Place order for vacuum vessels – February 2005.
- Begin production of first cryostated magnet – August 2006.

Critical path items

- Conceptual design completion.
- Vacuum vessel order placement.
- Start of production.

Cryostat schedule

WBS 2.1.1.2

09Apr04

Planned
Critical
Late Dates
Milestone
Progress
Summary
Float

Activity ID	Activity Description	Original Duration	Early Start	Early Finish
1	New magnet fabrication and test	1347d	02Feb04	01Jun09
1.1	LHC-type Quadrupoles	1260d	02Feb04	28Jan09
1.1.1	COLD MASS	651d	02Feb04	23Aug06
1.1.2	Q1 through Q5 CRYOSTAT	560d	01Mar04	12May06
1.1.2.1	Design & Detailing	380d	01Mar04	30Aug05
1.1.2.1.1	Conceptual Design	80d	01Mar04	21Jun04
1.1.2.1.2	Vaccum Vessels	40d	22Jun04	17Aug04
1.1.2.1.3	Suspension System	40d	18Aug04	13Oct04
1.1.2.1.4	Thermal Shield	20d	14Oct04	10Nov04
1.1.2.1.5	Two-Phase Shell	20d	11Nov04	10Dec04
1.1.2.1.6	Internal Piping (incl Pipe Support)	40d	13Dec04	11Feb05
1.1.2.1.8	Interconnects (incl Bellows)	120d	14Feb05	02Aug05
1.1.2.1.8.1	Q1 to Q2; Q2 to X3; X3 to Q3	20d	14Feb05	11Mar05
1.1.2.1.8.2	Q3 to Feed Box	20d	14Mar05	08Apr05
1.1.2.1.8.3	Q4 to X2R	20d	11Apr05	06May05
1.1.2.1.8.4	Q4 to TeV	20d	09May05	06Jun05
1.1.2.1.8.5	Q5 to X2L	20d	07Jun05	05Jul05
1.1.2.1.8.6	Q5 to TeV	20d	06Jul05	02Aug05
1.1.2.1.9	Superinsulation	20d	03Aug05	30Aug05
1.1.2.2	Cryostat Procurement	320d	14Feb05	12May06
1.1.2.2.1	All Components for Base Quadrupoles	320d	14Feb05	12May06
1.1.2.2.2	All Components for Spares	320d	14Feb05	12May06
1.1.2.2.3	Procurement oversight	180d	31Aug05	12May06
1.1.3	MTF TEST STAND	771d	02Feb04	15Feb07
1.1.4	Q1 through Q5 PRODUCTION	680d	15May06	28Jan09
1.1.4.1	174-1	211d	15May06	15Mar07
1.1.4.2	174-2	191d	12Jul06	12Apr07

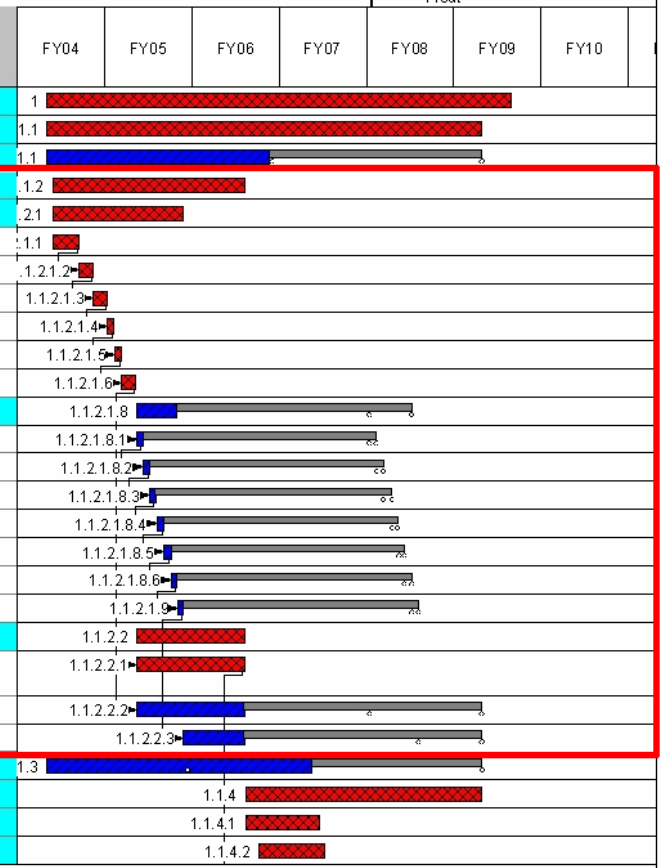

_BTeV20_ALLPRO_mdc 1 of 18 WBS2_0

Cryostat cost

WBS 2.1.1.2

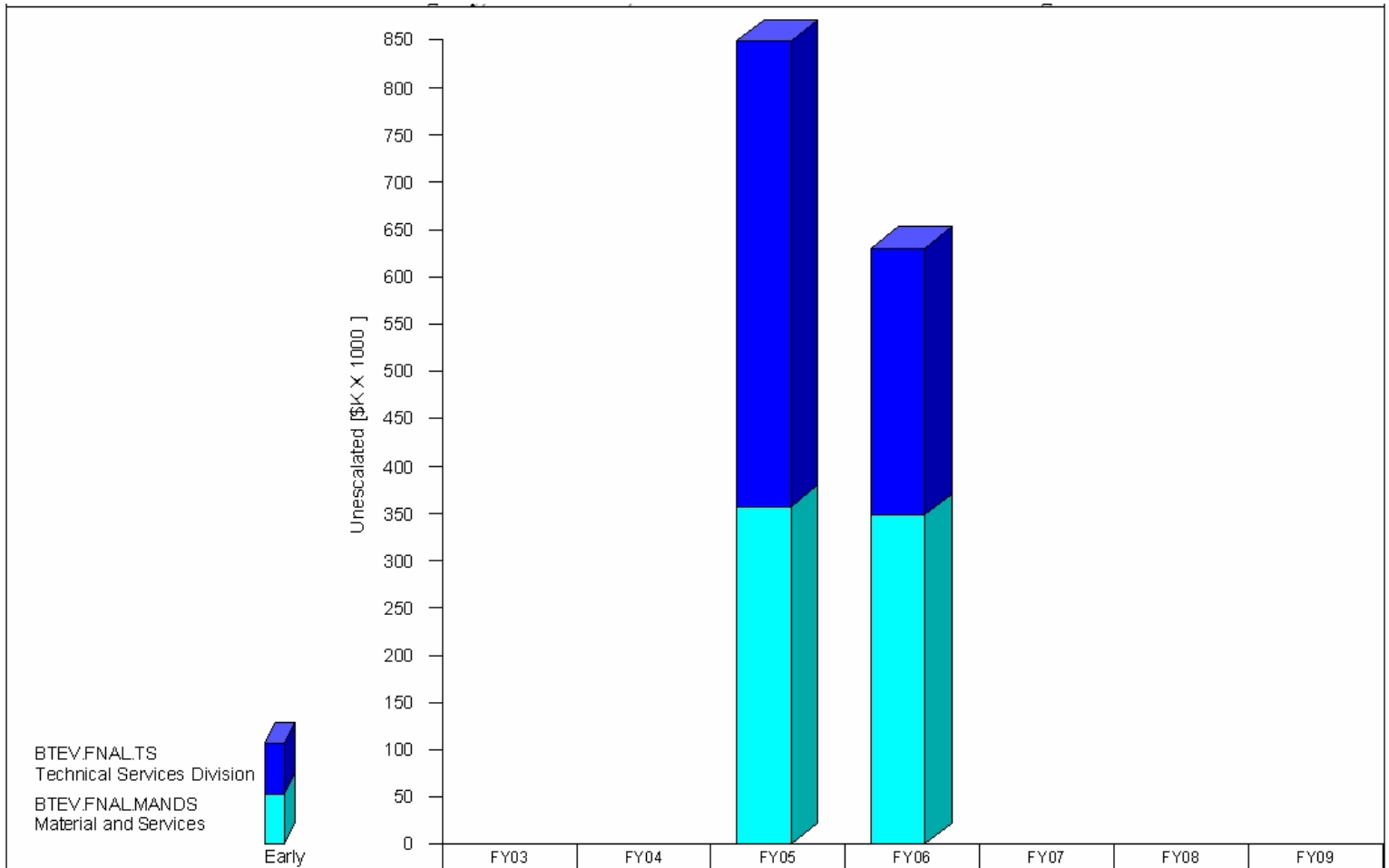

	FY03	FY04	FY05	FY06	FY07	FY08	FY09
BTEV.FNAL.MANDS : Material and Services	0	0	355	346	0	0	0
BTEV.FNAL.TS : Technical Services Division	0	0	492	282	0	0	0

BTeV20_ALLPROI 1 of 1 WBS2_0

Cryostat labor

WBS 2.1.1.2

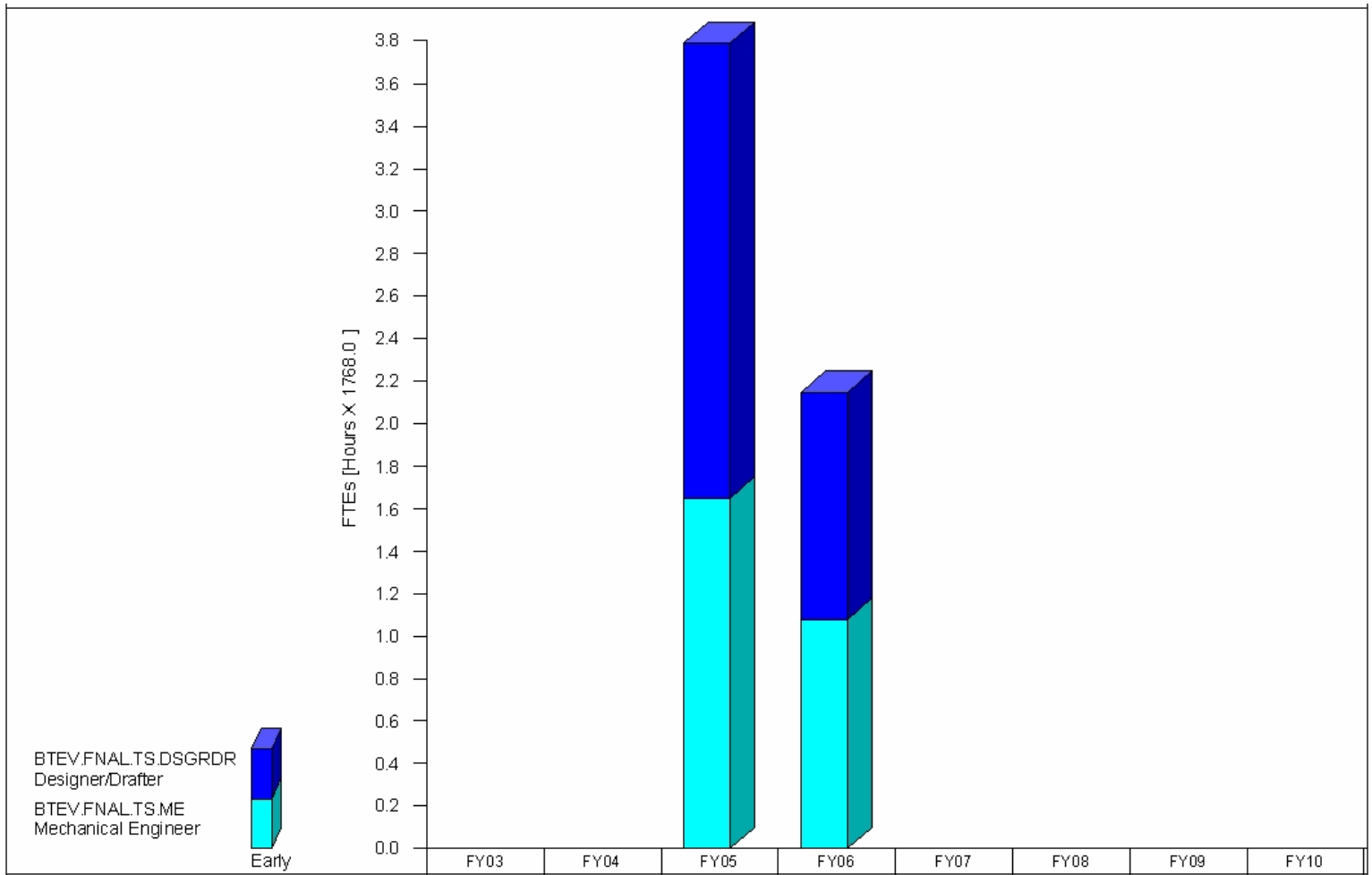

	FY03	FY04	FY05	FY06	FY07	FY08	FY09	FY10
BTEV.FNAL.TS.ME : Mechanical Engineer	0.0	0.0	1.6	1.1	0.0	0.0	0.0	0.0
BTEV.FNAL.TS.DSGRDR : Designer/Drafter	0.0	0.0	2.1	1.1	0.0	0.0	0.0	0.0

_BTeV20_LABDAYI 1 of 1 WBS2_0

Cost and schedule summary WBS 2.1.1.2

- Schedule:
  - Conceptual design: March 2004 – June 2004
  - Detailed design (including interconnects): June 2004 – August 2005
  - Procurement: February 2005 – May 2006
- Engineering, design, and parts procurement costs:
  - M&S: $701K (all in FY05 and 06, does not include spares)
  - EDIA: $774K (all in FY05 and 06, includes procurement oversight)
- Engineering and design manpower requirements:
  - Engineers: 1.6 FTEs in FY05, 1.1 in FY06
  - Designers and drafters: 2.1 FTEs in FY05, 1.1 in FY06
  - Ongoing effort after FY06 is part of the production effort

Risk analysis

Risk	Mitigation
▪ Insufficient resources applied to engineering and design drafting early in the design phase.	▪ Define and allocate resources during conceptual design phase.
▪ Suspension system not adequate.	▪ Include prototype testing in early detailed design phase.

Summary

- The cryostat design is a straightforward extrapolation of similar work on the Tevatron, SSC, TESLA, and LHC projects.
- Cost estimates are based on detailed, parts-level estimates made for LHC cryostats adjusted for design differences.
- Resources are in place and already involved in the BTeV quadrupole cryostat conceptual design effort.
- Experienced staff in:
  - Engineering
  - Procurement
  - Production
  - Test